W SERIES: 7 DAY TIME SWITCHES
WIRING DIAGRAMS

http://waterheatertimer.org/Tork-timers-and-manuals.html

W100 (SPST)

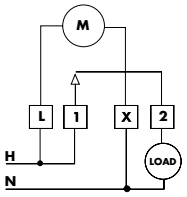

W200 (DPST)

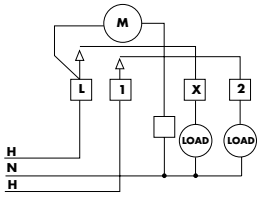

W300 (3PST)

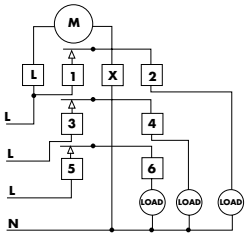

W120 (SPDT)

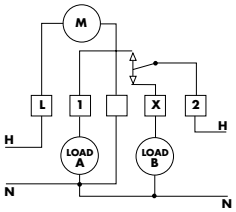

W220 (DPDT)

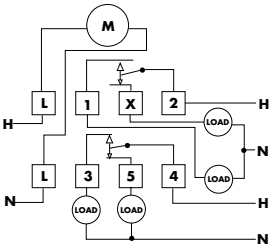
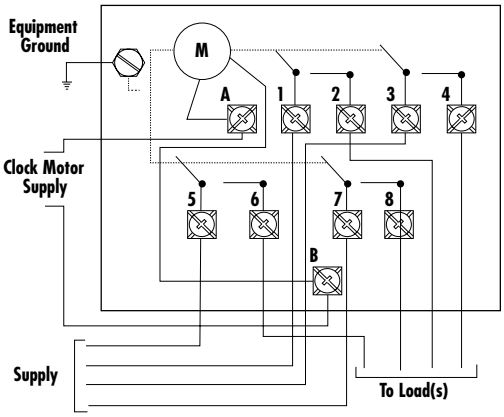
W400A (4PST)