http://waterheatertimer.org/Intermatic-timers-and-manuals.html#talento-800

Operating Instructions

GRÄSSLIN

talento 800 Series

365-Day One, Two and Four Circuit Electronic Time Controls

The talento 800 controls are one, two and four channel electronic time switches with 365-day, 7-day and 24-hour programming. The channels are freely programmable with a total of 400 schedules. The load status, time of day, and date are displayed on a large LCD readout. In addition to conventional On/Off programming, the unit provides a "Pulse" and "Cycle" function.

In Optional Enclosure

Functional Description

The talento 800 time control can be programmed with a 24-hour, 7-day, or a 365-day schedule (with individual holidays or holiday/vacation periods.) This control incorporates a calendar through the year 2095 and also includes automatic leap year adjustment. The annual daylight savings/standard time changes can be programmed to occur automatically each year through 2095.

Please read these operating instructions carefully so that you will be able to take full advantage of the functions offered by the talento 800 time control.

TO THE INSTALLER:

1. Read operating instructions carefully.
2. Check the input voltage ratings marked on the unit to make sure this product is suitable for your power supply and application.
3. Disconnect power supply prior to installation to prevent electrical shock.
4. Damage to the relay contacts caused by short circuiting will void warranty.
5. Wire in accordance with National and Local electrical code requirements.

TECHNICAL DATA

Input Voltage:	Separate models available for 24V, 120V or 240VAC, 50-60 Hz input
Relay Switch Rating:	16A @ 24/250 VAC
Output Relay:	SPDT dry contacts for each channel
Power Consumption	5 VA
Battery Backup:	6 years, replaceable
Temperature Range:	–13°F to 131°F (–25°C to 55°C)
Display:	AM/PM LCD 1" x 1-11/16"
Weight:	18 oz.
Mounting:	Surface & DIN rail (NEMA 1 indoor & NEMA 3R outdoor enclosures available)
Shortest Switching Time:	One second

Installation

MOUNTING

Surface mounting the talento 800 inside a control panel or enclosure is accomplished with a standard DIN rail.

Dimensions

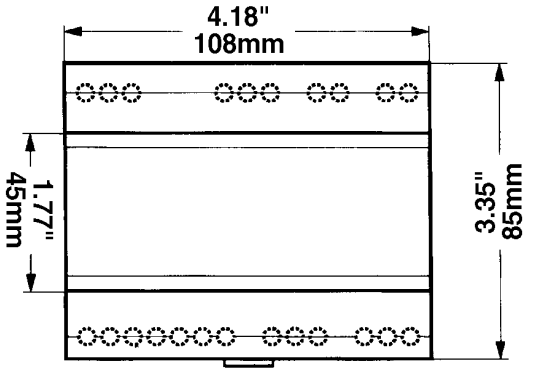

Place the two protruding guides, which are on the top of the rear rail cutout slot, over the top lip of the rail; then snap the bottom into place.

For stand-alone installation use a Grasslin indoor/outdoor enclosure.

The timer module can be removed from the timer housing for programming or change-out purposes.

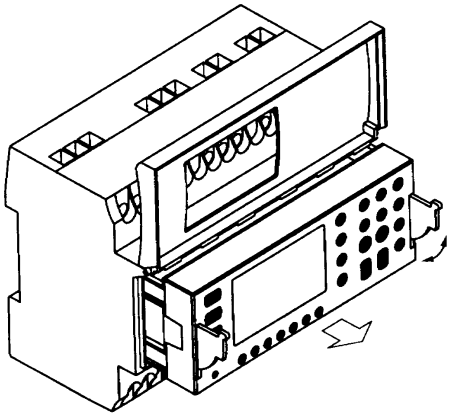

WIRING

Make certain to connect only to the supply voltage designated on the unit itself. Warranty will be void if wrong voltage is applied. Connect wires to the screw terminals in accordance with the wiring diagram shown (use 12 to 22 AWG wire).

INSTALLATION CHECKLIST

1. The time switch should have its own independent circuit for power supply.
2. Since all electronic instruments are sensitive to voltage spikes, close attention must be paid to the following:

a) If possible, power to the electronic time switch should be supplied from a phase different from the one supplying power to the load.

b) **INDUCTIVE-LOADS** should have suitable VARISTOR and RC network ( ) across the supply terminals to reduce voltage spikes.

Terminal Connections

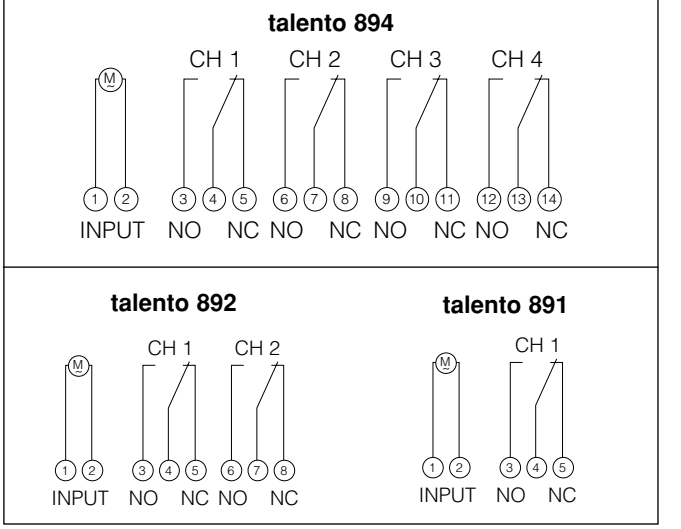

c) **DC INDUCTIVE LOADS** should have a diode across their terminals to eliminate back EMF of the inductor.

d) **HIGHLY INDUCTIVE LOADS**, especially fluorescent lights, may require a relay in which case (a) and (c) apply.

e) **IN HIGH LIGHTNING AREAS**, a surge suppressor should be installed.

KEYPAD DESCRIPTION

1 – 7 – Day selector (1 = Mon, 2 = Tue, etc.)
Reset* – "Restarts" microprocessor, all programs are preserved
+1h – Switch for daylight savings time functions
Prior. – Sets priorities
Year – Sets year when setting actual time or DST
Day – Used to set the day of the month
Month – Used to set the month
Clear – To cancel program(s)
Prog. – Used to review/program/store
– Recalls actual time (Time of Day)
– Sets the pulse (momentary contact) command
– Sets the Cycle function ("repeating" pulse command)
m/s – Selects minute or second increments
→| – Used to set the date range
h – Hour advance
m – Minute advance
I/O – Manual override for each channel & sets ON ◉, OFF ◯ command for each channel

*Recessed buttons—use a long pen point or pencil

LCD DISPLAY ELEMENTS

The LCD incorporates a number of different elements to display various data and information.

A new feature of the talento 800 Series is the “Sleep” Mode, an energy saving feature. This feature turns off the LCD (when the unit is not powered) if no buttons are pressed for a period of two minutes. When in the sleep mode the only character displayed is a flashing Colon (:). To restore the full display simply press the clock (◷) button one time.

BLOCK NUMBERS

Block numbers 00 through 99 are automatically issued during programming. They cannot be assigned or changed by the programmer. Switching commands **without** a date assignment always receive the block number 00 (priority 0 is always assigned to block 00 – this cannot be changed). All switching commands with a date assignment receive block numbers from 01 to 99. These are issued in ascending order.

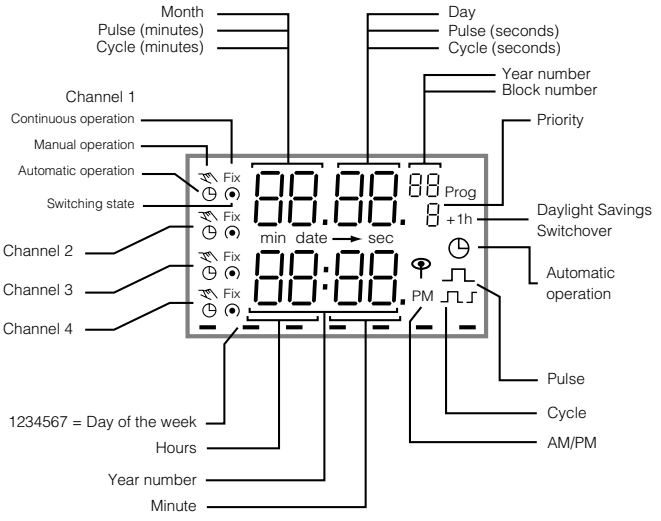

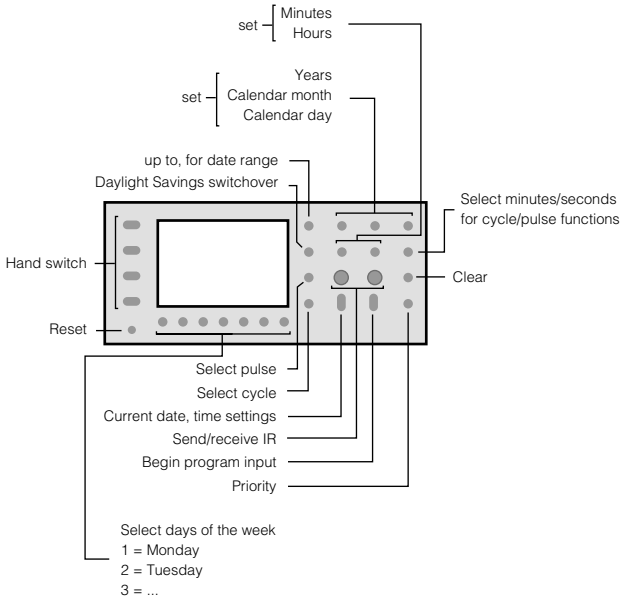

Execution of Programs

At beginning of each day the microprocessor determines which of the stored programs for that day have the highest priority. Only the highest priority program(s) will be executed.

Once the talento 800 is programmed, it will automatically “look back” and assume the correct ON or OFF switch position.

PRIORITY

Switching commands with a single date or date range assignment can be issued different priorities (priority 0 and block 00 is always assigned to switching commands without a date or date range – this cannot be changed). Priority 2 is issued automatically if you start programming by entering a single date. Priority 1 is issued automatically if you start programming by entering a date range. In either case, the priority can be changed between 1 and 9 by pressing the “priority” button during programming. Programs with a higher number priority will be executed first

PROGRAM STORAGE CAPACITY

The talento 800 can store up to 400 programs. To view the number of unused or “free” programs available, press the “Prog.” button twice (3 times from the sleep mode). Every “Date” or “Date Range” entered and each unique “On” or “Off” command uses one program position. In other words, each time the “Prog.” button is pushed a storage position is used. An “On” or “Off” command assigned to multiple days and/or multiple channels only utilizes one program position. Therefore, an “On” event at 7:00 AM Monday or 7:00 AM Monday through Friday uses only one program position. Likewise, if it was assigned to two, three or four channels it would still only constitute one program.

PROGRAM INSTRUCTIONS
TABLE OF CONTENTS

Setting Time/Date Format.....Chart 1 (page 4)

Setting Daylight Changeover .....Chart 2 (page 4)

Setting Actual Time/Date.....Chart 3 (page 5)

Setting 24 Hr./7 Day On/Off Schedule .....Chart 4 (page 5)

Setting 24 Hr./7 Day Pulse Schedule .....Chart 5 (page 6)

Setting 24 Hr./7 Day Cycle Schedule.....Chart 6 (page 6)

Setting Date Specific (Holiday)
On/Off Schedule.....Chart 7 (page 7)

Setting Date Specific Pulse Schedule.....Chart 8 (page 8)

Setting Date Specific Cycle Schedule .....Chart 9 (page 9)

Complete Programming Instructions.....Chart 10 (page 10)

Complete Steps 1-3 Before Programming Timer

1

Programming TIME/DATE FORMAT

START

Press ◷ to exit sleep mode — *Full Display Appears*

OK

Press ◷ a second time to enter Prog. mode — *" : " Stops Flashing*

OK

Press "1" (Mon) button — *Selects "AM/PM" (AM or PM is displayed) or "Military Time" Format*

OK

Press "2" (Tue) button — *Selects "Month/Day" or "Day/Month" Format*

OK

Press ◷ to store and return to Run mode — *" : " Flashes*

END

2

Programming DAYLIGHT SAVINGS CHANGEOVER

START

Press ◷ to exit sleep mode — *Full Display Appears*

OK

Press ◷ a second time to enter Prog. mode — *" : " Stops Flashing*

OK

Press "+1h" button — *To select Daylight Changeover Mode*
1x – AU = Automatic (European Dates)
2x – cHA = USA Dates (Must be entered)*
3x - NO = No Changeover

OK

Press "Month" button — *Select Start Month From Chart Below**

OK

Press "Day" Button — *Select Start Day From Chart Below*

Press →| button — *" →| " Flashes*

OK

Press "Month" button — *Select End Month From Chart Below*

OK

Press "Day" button — *Select End Day From Chart Below*

OK

Press "Prog." — *To Store and Return to Run Mode*

END

***Daylight Savings Changeover Dates**
2000: April 2, October 29
2001: April 1, October 28
2002: April 7, October 27

3 Programming ACTUAL TIME/DATE

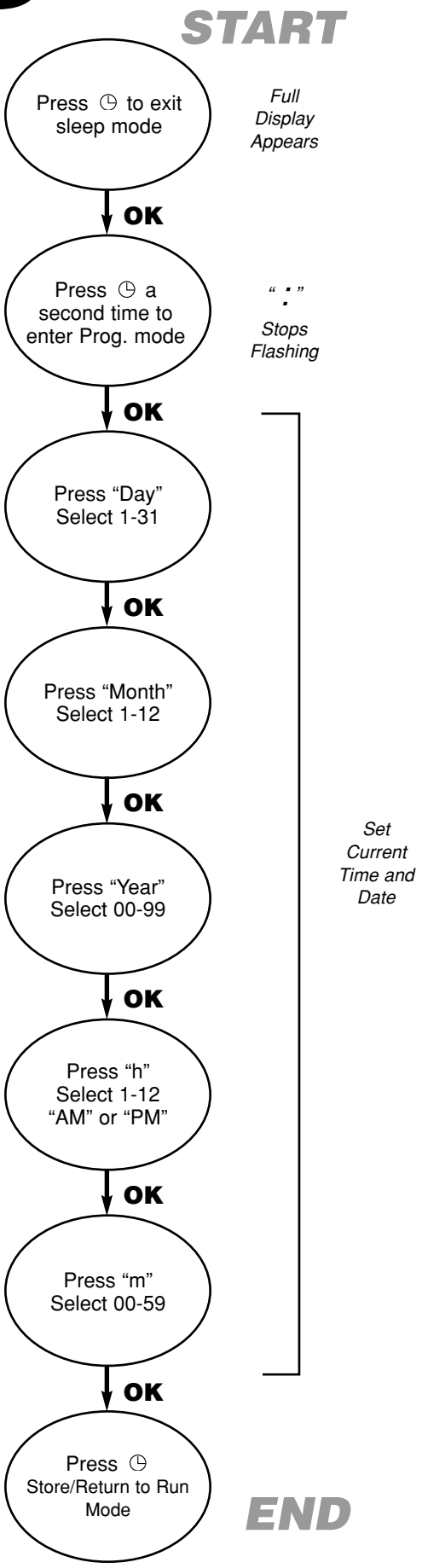

4 Programming 24 Hour / 7 Day "ON/OFF" SCHEDULES

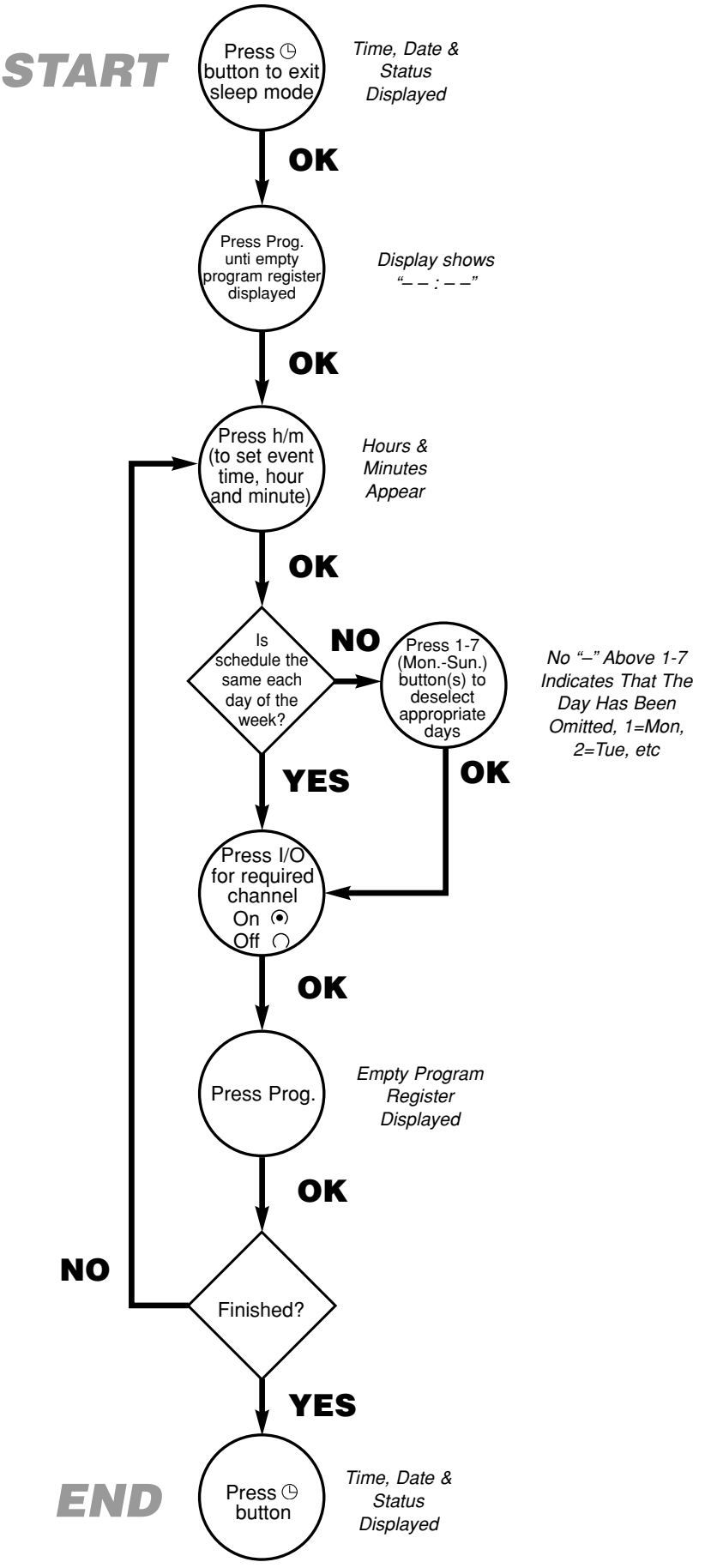

5 Programming 24 Hour / 7 Day PULSE

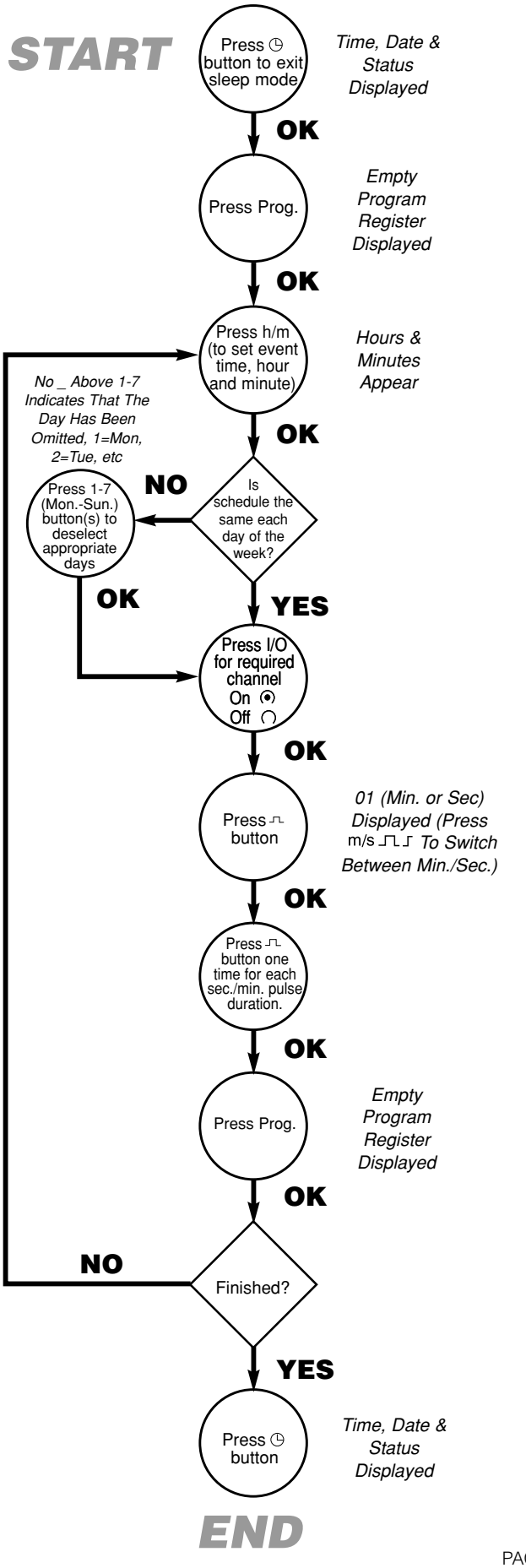

6 Programming 24 Hour / 7 Day CYCLE

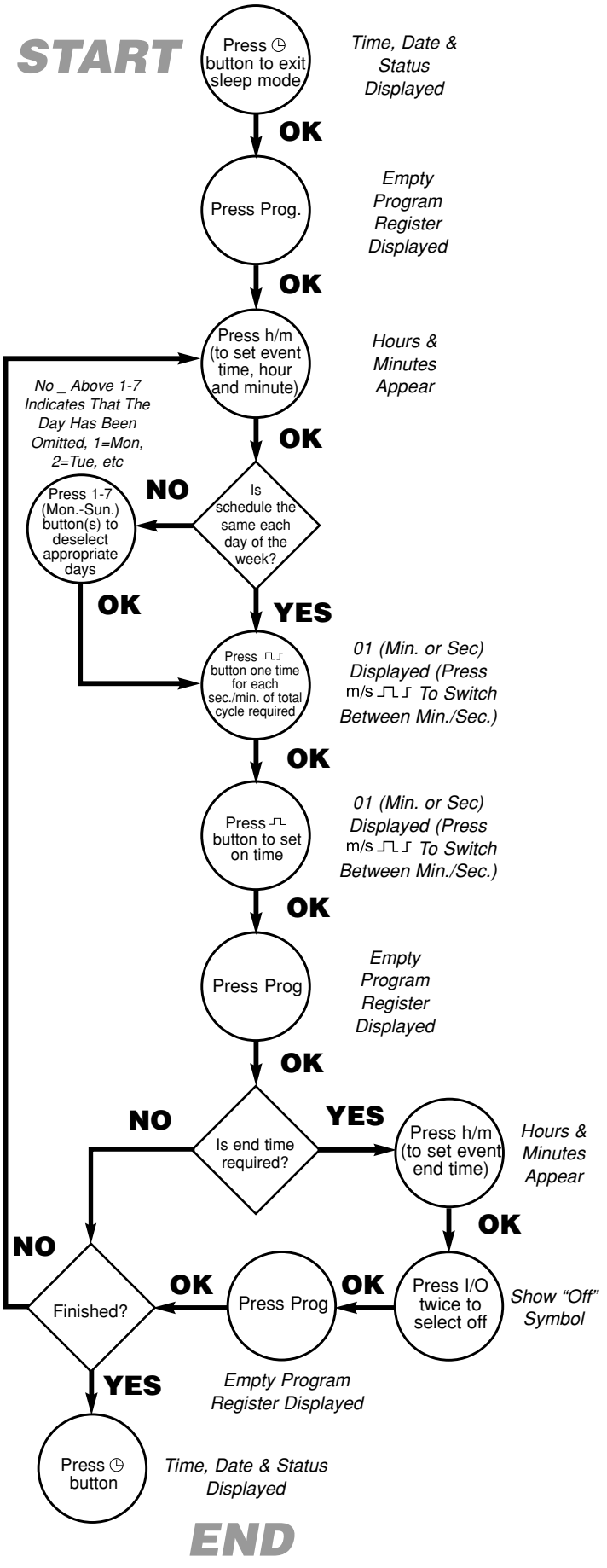

7

Programming Date Specific (Holiday) ON/OFF EVENTS

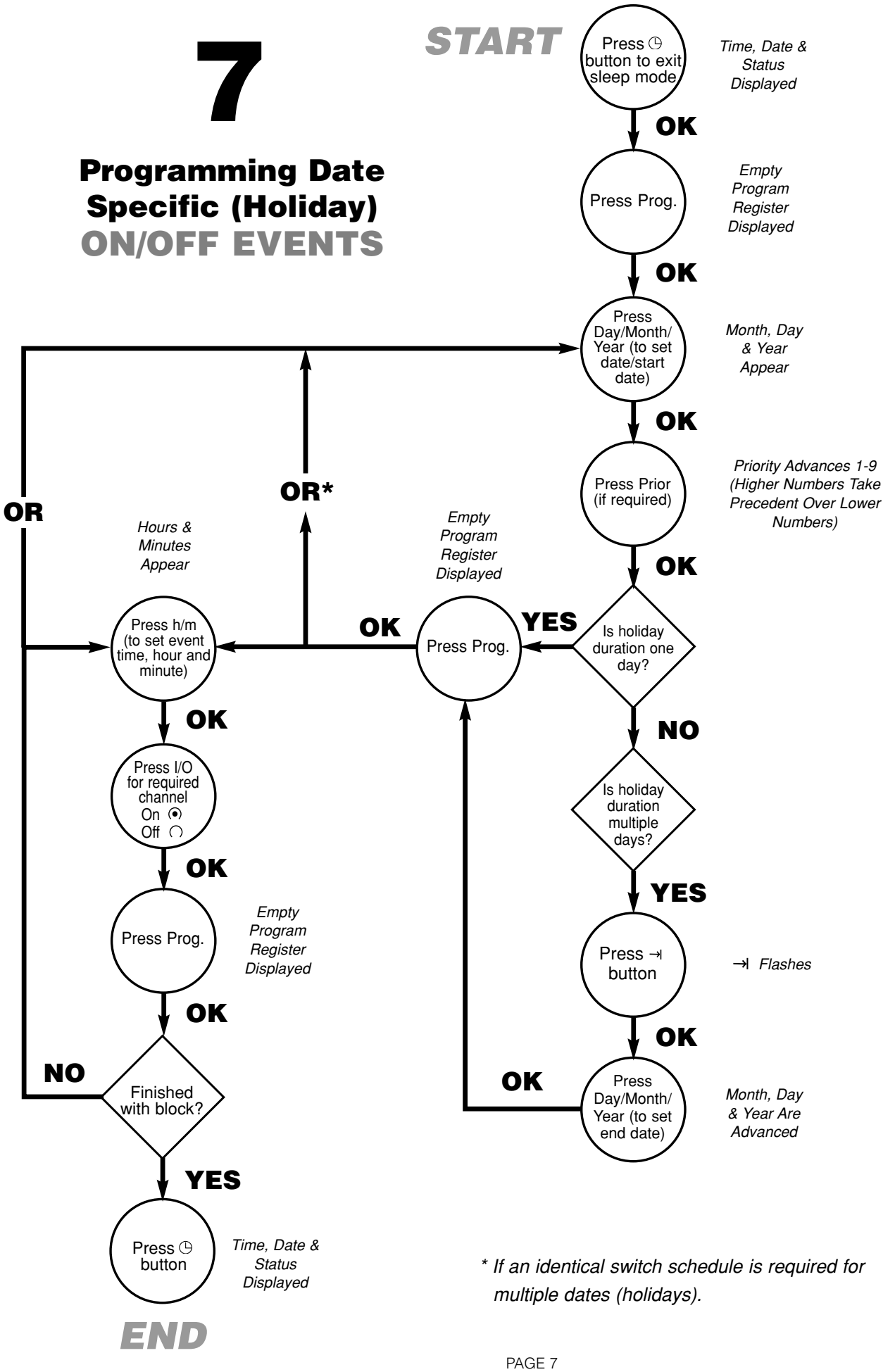

** If an identical switch schedule is required for multiple dates (holidays).*

8

Programming Date Specific (Holiday) PULSE EVENTS

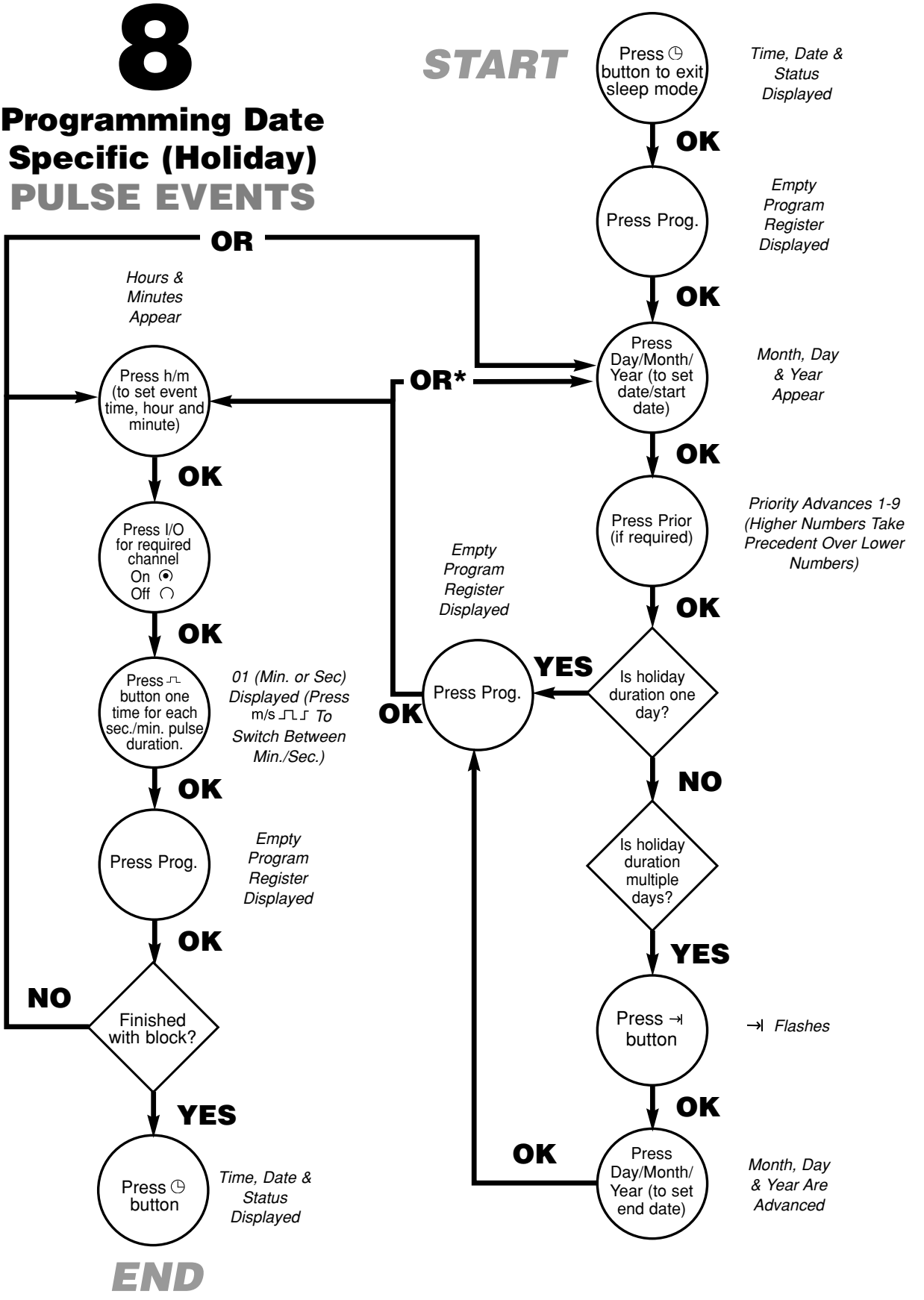

** If an identical switch schedule is required for multiple dates (holidays).*

9

Programming Date Specific (Holiday) CYCLE EVENTS

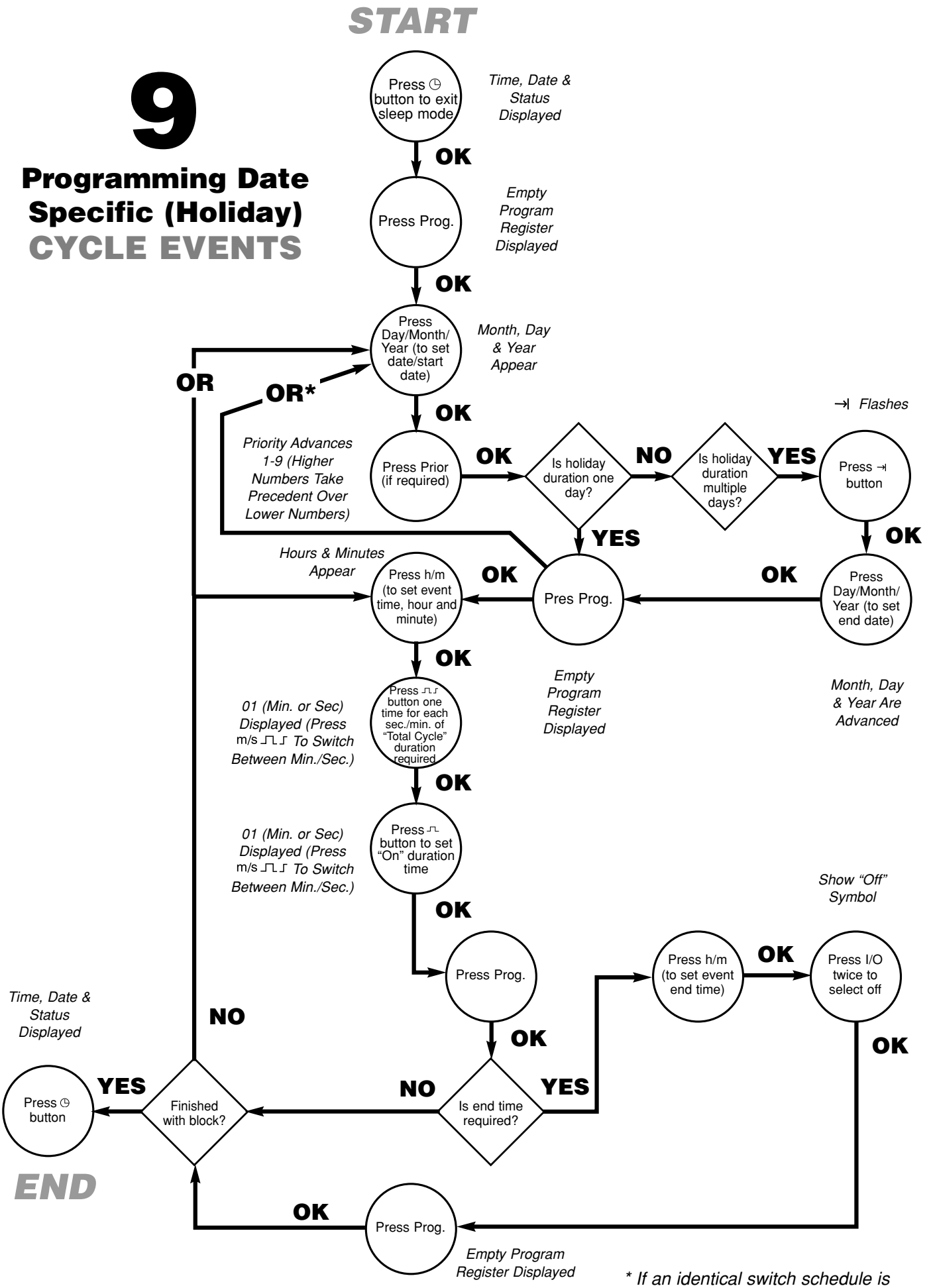

** If an identical switch schedule is required for multiple dates (holidays).*

Complete Programming Instructions

talento 800 Series

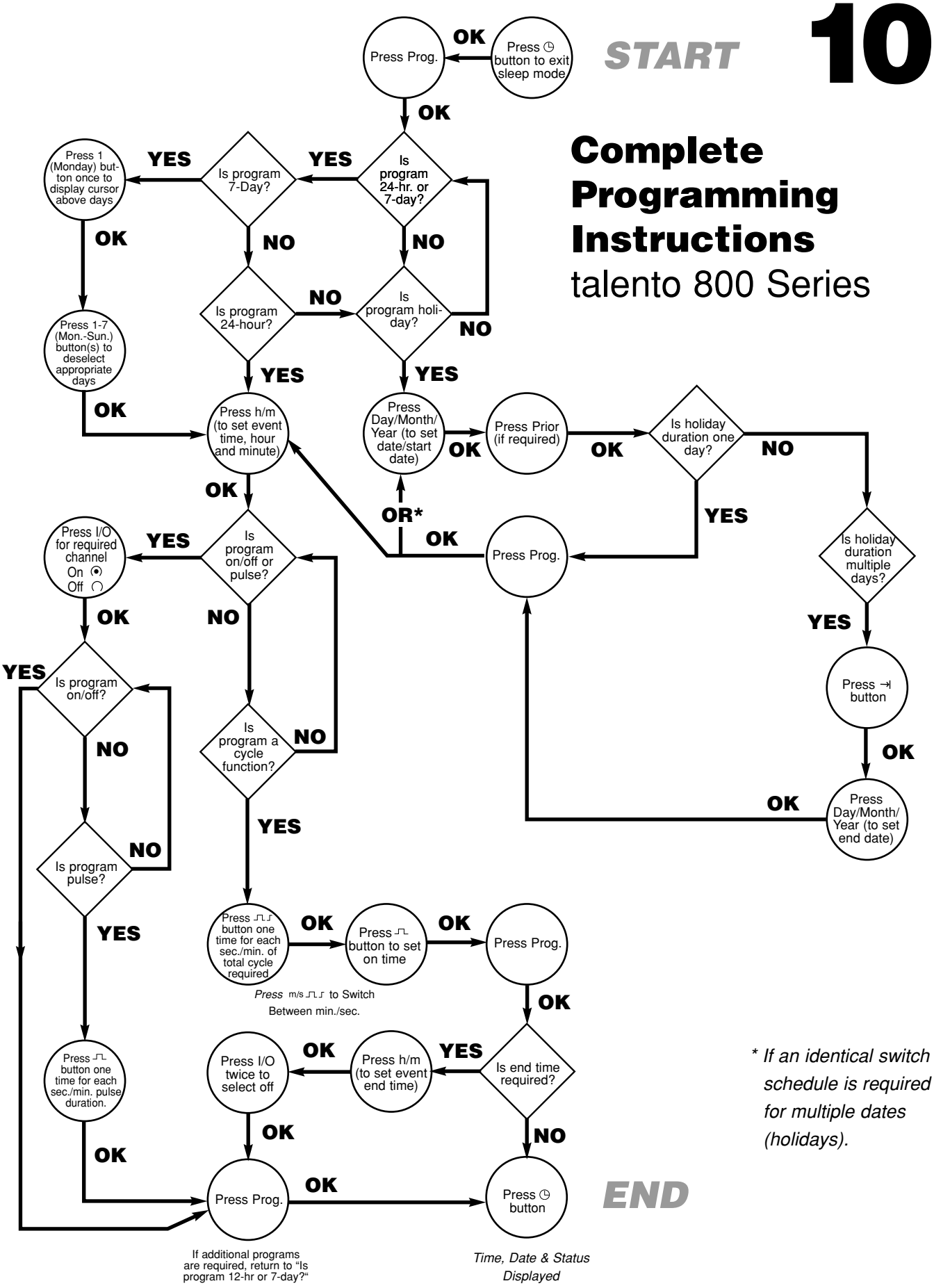

** If an identical switch schedule is required for multiple dates (holidays).*

MANUAL OVERRIDE

Each channel can be manually overridden by pressing the appropriate "Hand switch". There are two types of manual overrides: "temporary" and "fixed". A "temporary" override is in effect until the next programmed switch command, at which point the automatic mode takes over. A "fixed" override lasts indefinitely and must be canceled by the user. The LCD displays the operating mode of each channel as follows:

◉ ◷ = Automatic "ON"

◯ ◷ = Automatic "OFF"

◉ ☝ = Temporary "ON"

◯ ☝ = Temporary "OFF"

◉ FIX = Fixed "ON"

◯ FIX = Fixed "OFF"

PROGRAM REVIEW/EDIT/DELETE

With the full display in view:

1. Press the "Prog." button once; a free program location is displayed.
2. Press the "Prog." button a second time, the number of free blocks and memory locations are displayed.
3. Press the "Prog." button a third time, a free program location is again displayed – additional programs can be entered as described in the appropriate programming section.
4. Press the "Prog." button a fourth time, the first program of the "Block" is displayed.
5. Continue pressing the "Prog." button to review additional programs, one event at a time. To enter the next "Block", press and hold the "Prog." button for one (1) second. Review the events in the block by pressing the "Prog." button. When finished, press the clock (◷) button one time to return to the operating mode.
6. To edit a particular command, scroll to its location and change (or add) data as is done during a normal programming procedure – press the "Prog." button to store the change. When finished, press the clock (◷) button one time to return to the operating mode.
7. To delete a particular command, scroll to its location and press the "Clear" button. Continue pressing the "Prog." button to view additional programs or press the clock (◷) button to return to the operating mode.
8. To delete all switching commands; press the "Prog." button until the number of free blocks and memory locations are displayed. Press the "Clear" button once, "cl" flashes in the display. Press the "Clear" button until the display shows:

   "Fr 99"

   400

   All switching commands are now cleared.

   Press the clock (◷) button to return to the "Run" mode.

BATTERY-POWERED RESERVE

In the event of a power failure, the built-in Lithium battery maintains the current time and date for up to 6 years. The switch program schedule is stored in EEPROM memory and is non-volatile.

NOTE: If the display shows Er01, the battery must be replaced as follows:

1. Remove control module
2. Remove battery casing
3. Remove battery
4. Installation is the reverse of removal

GRÄSSLIN

TALENTO 800 PROGRAM WORK SHEET

DAILY/WEEKLY PROGRAM STEPS

BLOCK 00 PRIORITY 0

Event Num.	Chan. Num.	Day(s) 1 Mo	2 Tu	3 We	4 Th	5 Fr	6 Sa	7 Su	Time	Event Type On, Off, ⎍, ⎍⎍	Remarks (Imp./Cyc. Info)
1											
2											
3											
4											
5											
6											
7											
8											
9											
10											

SINGLE DATE/DATE RANGE PROGRAMS (HOLIDAYS)

Event Num.	Chan. Num.	Date Range From	To	Block	Priority	Time	Event Type On, Off, ⎍, ⎍⎍	Remarks (Imp./Cyc. Info)
1								
2								
3								
4								
5								
6								
7								
8								
9								
10								

Intermatic, Inc.
7777 Winn Road
Spring Grove, IL 60081-9698

80.10.0983.7/07/01