SPRING-WOUND TIMER OPERATING WITH MOMENTARY CONTACT SYSTEM

http://waterheatertimer.org/Countdown-timer-horsepower-ratings.html#TorkA
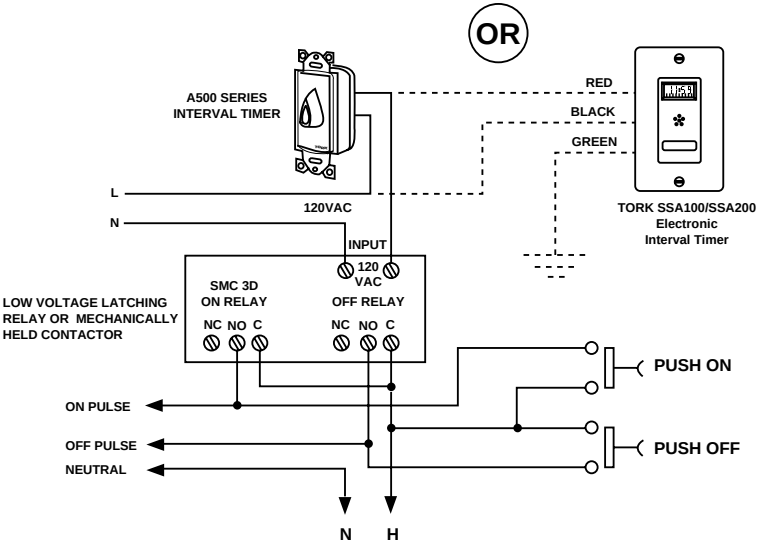
TORK A500 series spring-wound timer or SSA100/SSA200 electronic interval timer for timed override, is connected to an SMC-3D momentary contact adapter. For operation of mechanically-held contactors and low voltage relays where remote momentary push button stations are necessary or already exist.