http://waterheatertimer.org/Intermatic-control-centers-and-manuals.html

Genuine Pool & Spa Replacement Parts

INTERMATIC®

T10000R Series Control Centers

Model No.	Item No. 3	Item No. 7
T10000R	None	None
T10004R	None	T104M
T10101R	T101M	T101M
T10404R	T104M	T104M
T10604R	T106M	T104M
T12404R	T104M201	T104M

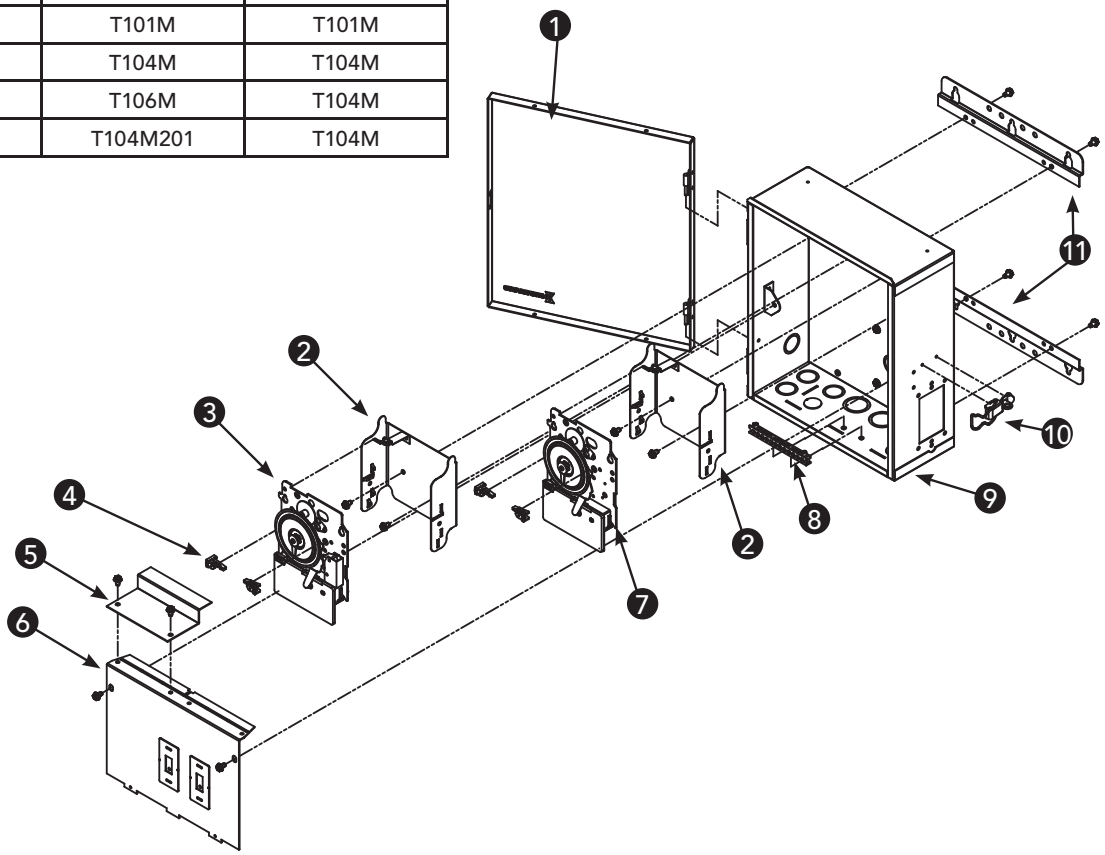

Item No.	Description	Part No.	Shipping Weight (lb.)	*List Price ($)
1	Cover - Enclosure	6TP2819A-WWH	3.0	45.12
2	Bracket - Time Switch	22T338GR	0.8	9.62
3	Time Switch Mechanism #1	See Table Above	1.5	135.02†
4	Tripper - Time Switch, (1) ON - (1) OFF per pack	156T1978A	0.3	3.33
5	Plate - Filler	24T5796-WWH	0.8	16.72
6	Plate - Dead Front	24TP6019-WWH	1.5	22.81
7	Mechanism #2	See Table Above	1.5	135.02†
8	Terminal Bar - Grounding	PA116	0.5	17.41
9	Case - Enclosure	2TP3388A-WWH	6.0	82.01
10	Latch - Enclosure	PA117	0.3	13.99
11	Bracket - Enclosure - Each	22T713	1.0	13.55

** Prices are subject to change without notice*
† Price may vary depending on model selected