TORK®

POOL & SPA CONTROLS ENCLOSURE DIMENSIONS
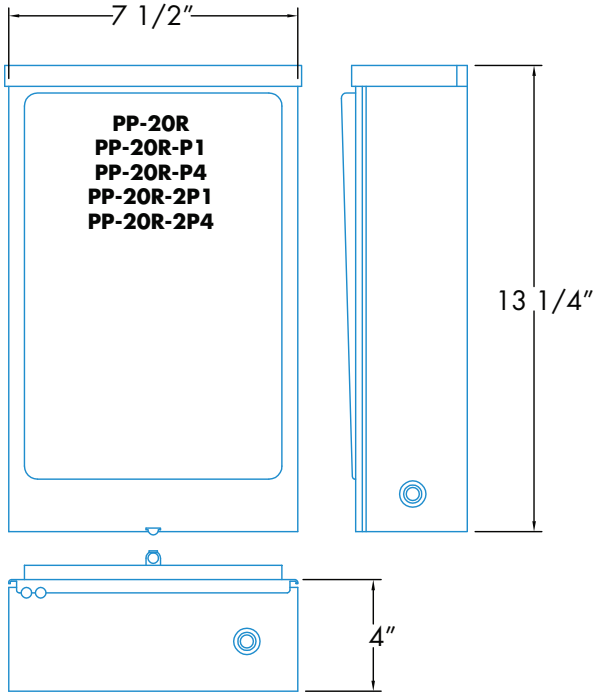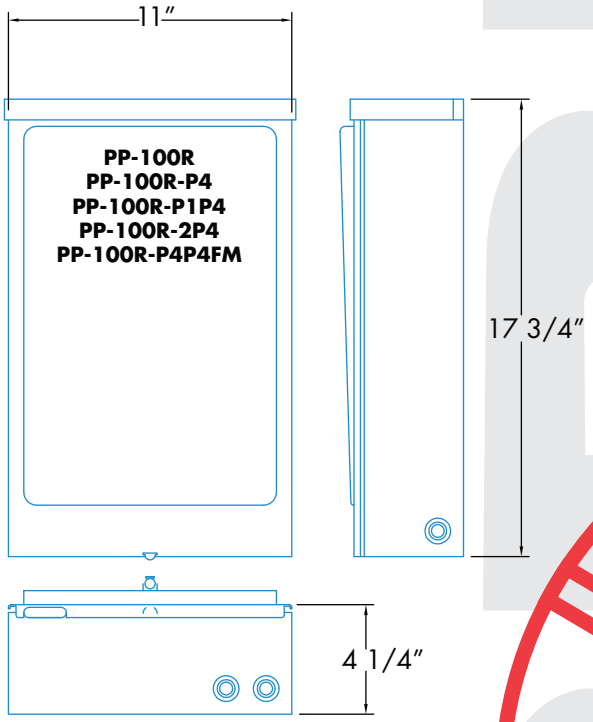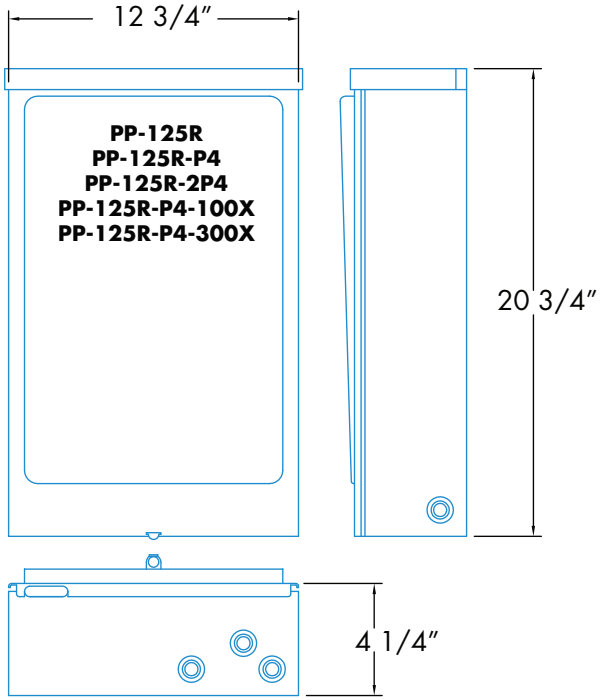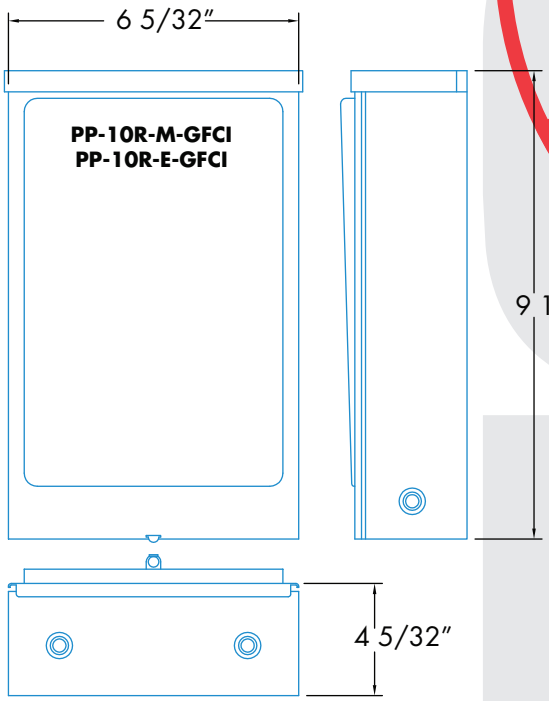
http://waterheatertimer.org/Tork-Pool-timers-and-manuals.html