WIRING DIAGRAM

Typical 120 Volt Installation

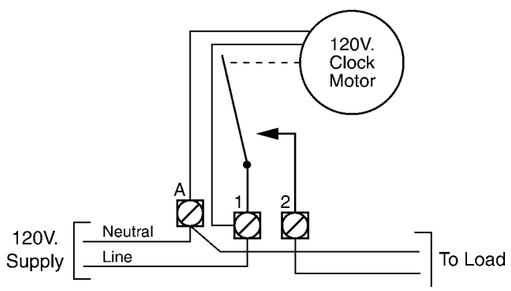

Typical 240 Volt Installation

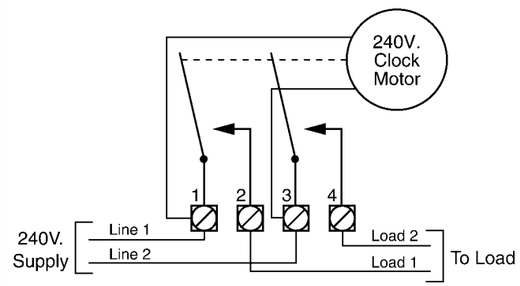

Filter and Cleaner Timer Inter-Connections

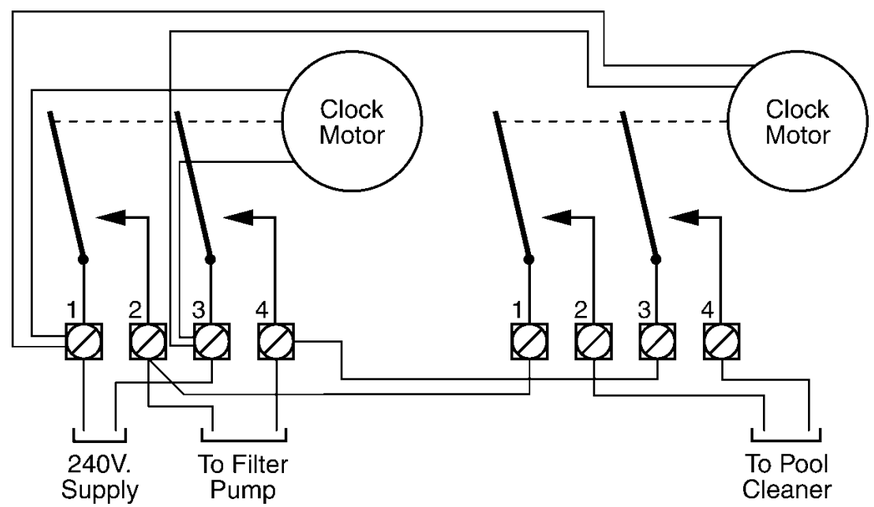

NOTES: 1. Grounding connections are not shown but must be provided. Refer to the National Electrical Code for details.
2. Diagrams above are only two of the many variations this Panel can accommodate.

WARRANTY

If within one (1) year from the date of installation, this product fails due to a defect in material or workmanship, Intermatic Incorporated will repair or replace it free of charge.

The warranty does not cover labor for removal or reinstallation and does not apply to: (a) damage caused by accident, abuse, mishandling, or dropping; (b) a unit which has been subject to unauthorized repair; (c) units not used in accordance with directions; (d) damages exceeding the cost of the product. Some states do not allow a limitation of damages so the foregoing warranty may not apply to you. This warranty gives you specific legal rights and you may also have other rights which vary from state to state.

This warranty service is available, if the defective product or its defective component is returned with proof of purchase and date of installation, either (a) to the dealer from whom the unit was purchased or (b) by shipping prepaid to the Intermatic Incorporated/After Sales Service, 7777 Winn Rd., Spring Grove, IL 60081-9698/815-675-7000 http://www.intermatic.com

Because of our commitment to continuing research and improvements, Intermatic Incorporated reserves the right to make changes, without notice, in the specifications and material contained herein and shall not be responsible for any damages, direct or consequential, caused by reliance on the material presented.

INTERMATIC INCORPORATED, SPRING GROVE, IL 60081-9698
http://www.intermatic.com

158TP10425

http://waterheatertimer.org/Intermatic-control-centers-and-manuals.html

INTERMATIC®
T30000R SERIES
POOL/SPA EQUIPMENT CONTROLS

INSTALLATION OPERATION & SERVICE MANUAL

CONTROL PANEL WITH TIME SWITCH FOR INDOOR/OUTDOOR USE

Suitable for Pool Equipment Control and for Direct Connection of Underwater Lights
ELECTRICAL RATINGS: See inside Enclosure Door

DANGER! TO AVOID RISK OF INJURY:

...do not permit children to operate the Control Unit or use the Pool/Spa unless they are closely supervised at all times.
...test GROUND FAULT protection regularly. If it fails to reset, DO NOT USE THE POOL or SPA!
Contact a qualified service technician.
...always disconnect electricity before servicing this control or the equipment connected to it.

READ, FOLLOW AND SAVE THIS INSTRUCTION MANUAL

GENERAL INFORMATION

Many of today's energy efficient pools and spas utilize the advantages of a single electrical panel, containing all the necessary controls for the safe, efficient and automatic operation of the pool/spa equipment. In addition, this Panel can also be used to control any outdoor equipment, sign or pump within its rated capacity.

The all-weather enclosure contains none one or two heavy-duty, industrial grade Time Switches. Also, it has provisions to install switches or a GFCI receptacle on the side as well as the inside. The Time Switch can also accommodate an optional heater control (fireman) switch.

The Control is designed to operate any pump, within its rated capacity. However, if protection to prevent dry start is required by the pump manufacturer, it must be provided in addition to this Control. Contact pump manufacturer if not sure and/or for more details.

IMPORTANT SAFETY INSTRUCTIONS

When installing and operating this Product and other associated equipment, basic safety precautions should always be followed, including the following:

1. Read and follow all instructions.
2. This Control must be installed by a qualified electrician, according to National and Local Electrical Codes.
3. Install this control not less than 5 feet (3 meters in Canada) from inside edge of pool. USE COPPER CONDUCTORS ONLY.
4. Do not exceed the maximum ratings of individual components, wiring devices, and current carrying capacity of conductors.
5. For Control grounding, bonding, installing and the wiring of underwater lights, refer to Article 680 of the National Electrical Code or Article 68 of the Canadian Electrical Code.
6. The Control should not operate any equipment which would cause bodily injury or property damage should it be activated unexpectedly.

READ, FOLLOW AND SAVE THIS INSTRUCTION MANUAL

INSTALLATION

1. Remove the four #10 hex head screws from the ***back*** of the enclosure and attach mounting brackets to enclosure.

2. Select the proper location for the Control and hang enclosure on a flat vertical surface or other support, using hardware suitable for the purpose.

3. Prepare the necessary conduit runs, terminate them at both ends and pull in the conductors as specified by the installation layout.

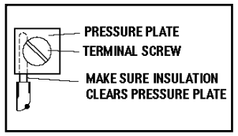

4. Refer to Figure 1 below; note that this enclosure contains one or two Time Switch(es). To wire the panel, follow the wiring diagram located inside the enclosure door. Make sure that connections to time switch terminals are tight (25 lb.-in. minimum) and insulation clears the pressure plate - see illustration.

5. If required by the heater manufacturer, install fireman switch kit 156T4042A (not furnished) on Time Switch Plate and make the fireman switch connections. Use at least #18 AWG wiring with insulation rated 300 Volt or higher. Place heater ON/OFF switch on heater to **ON** (see Figure 2). Some heaters may require a special connecting harness, contact heater manufacturer for details.

6. For direct wiring of underwater lights, refer to 1999 NEC 680-21(b), 2002 NEC 680-24(b) or CEC 680-060, 062 and 066 for further details.

7. To install additional wiring devices inside the enclosure, first remove rectangular knock-out(s) in dead front. Next, remove hex head screws in back of enclosure and install stand-offs* in place of screws. Attach wiring device to stand-offs.

- Stand-offs are not furnished. Order 21T156A for a set of four (4) stand-offs and mounting hardware.

8. If external bonding is required, install a bonding lug at bottom of enclosure and bond installation according to code requirements.

9. Testing of the installation is optional and recommended only if pump is securely in place and will not be damaged by this test:

a. Turn the manual lever of the Time Switch to OFF.

b. Turn ON power at breaker panel.

c. Move the manual lever of Time Switch to the right (ON). Pump should start and run on full speed.

In case of unsatisfactory results, turn OFF power, check your wiring, refer to Troubleshooting on Page 3.

10. Install front panel over wiring compartment. The control is now ready for programming, see OPERATION section on Page 3.

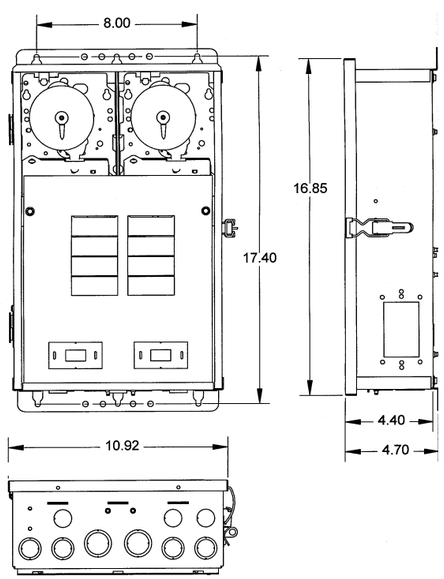

Figure 1

OPERATION

TO SET FILTER PUMP TIME SWITCH, follow instructions on the right. The length of the daily filtration/ heating cycle depends on many variables such as size, shape, geographic location of the pool, water chemistry, type of pool equipment, usage and season of year. If not sure, contact your local pool service professional for advice.

THE FIREMAN SWITCH (Heater Protection Mechanism), if required, is factory set and shuts OFF the heater 20 minutes before the Time Switch turns OFF the filter pump. The Fireman Switch requires no setting or service.

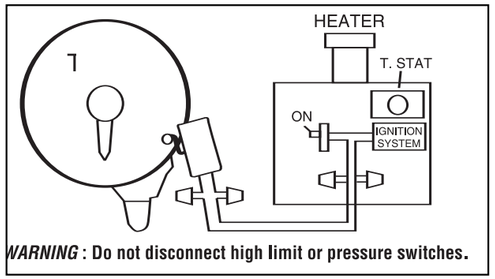

Figure 2

TIME SWITCH OPERATING INSTRUCTIONS

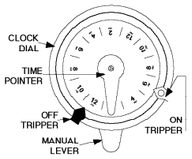

1. TO SET "ON" AND "OFF" TIMES: Hold TRIPPERS against edge of CLOCK-DIAL, pointing to time (AM or PM) when ON and OFF operations are desired. Tighten tripper screws firmly.

2. TO SET TIME-OF-DAY:
Pull CLOCK-DIAL outward. Turn in either direction and align the exact time-of-day on the CLOCK-DIAL (the time now, when switch is being put into operation) to the pointer.

- **TO OPERATE SWITCH MANUALLY:** Move MANUAL LEVER below CLOCK-DIAL left or right as indicated by arrows. This will not affect the next operation.
- **FOR MORE THAN ONE DAILY ON-OFF OPERATION:** Place additional tripper pairs on CLOCK-DIAL (order 156T1978A).
- **IN CASE OF POWER FAILURE:** Reset CLOCK-DIAL to proper time of day. See step 2 above.

TROUBLESHOOTING

SYMPTOM	CAUSE(S)	CORRECTIVE ACTION
1. Time Switch will not keep time but dial is turning.	1a. Frequent power outages 1b. Wrong voltage/cycle 1c. Loose clock motor connections	Reset dial Change clock motor Check connections
2. Time Switch Dial stops at ON or OFF tripper.	2a. Loose tripper 2b. Bent dial 2c. Defective motor	Check/change tripper Check/change mechanism Change clock motor
3. Dial stops after switch turns OFF.	3a. LINE leads are connected to LOAD terminals	Reverse LINE and LOAD connections
4. Load is ON at all times - dial is turning.	4a. Welded contacts 4b. Two ON trippers and no OFF tripper on dial 4c. Defective mechanism	Change mechanism Change tripper Change mechanism
5. Dead clock motor. (Clock motor gears do not rotate).	5a. Defective clock motor (open coil due to lightning or surge) 5b. Loose clock motor connections 5c. Wrong voltage	Change clock motor Check connections Change clock motor

Mechanical Controls

T30000R5

T30004R

T32404R

T30000R Series

100 Amp Pool/Spa Control Panels

The T30000R Series Control Panels reduce installation costs and provide all of the electrical requirements for any pool and/or spa installation. They offer an all-in-one electrical control center which can be custom wired for a wide variety of requirements, and eliminate the need for additional junction boxes and service panels. The enclosure accepts any combination of P1353ME or P4243ME or T100M or RC2000M or PF1000M Series mechanisms.

Applications:

- Filter Pumps
- Booster Pumps
- Heating Systems
- Lights
- Cleaning Systems
- Security Systems
- Fountains
- Sprinkler Systems
- Landscape or HID Lighting

Specifications:

Enclosure: 0.048 in. steel with electrostatically applied beige finish
16½ in. (41.9 cm) H x 10⅞ in. (27.6 cm) W x 4¼ in. (10.8 cm) D
Knockouts: Two ½ in., three combination ½ – ¾ in., and two combination ¾ – 1 in. knockouts on the bottom. Four ½ in., three combination ½ – ¾ in. on the back. One combination ¾ – 1 in. on the left side. One 1¾ x 2¾ in. knockout on the right side for mounting switches and GFCI
Panel Rating: 100 Amp, 120, 240 VAC or 120, 208 VAC single phase, 60 Hz.
Time Switch Rating: 30 Amp Resistive/Inductive, Tungsten or 1000 VA Pilot Duty each pole, 120, 208, 240 VAC; 2 HP (24 FLA), 120 VAC; 5 HP (28 FLA), 240 VAC
Shipping Weight: See table
Agency Approval: CSA/C-US

Model #	Description/ Mechanism	Switch	Clock Supply Volts AC, 60 Hz	Shipping Weight
T30000R5	Enclosure Only	None	NA/NA	15.5 lbs (7.0 kg)
T30004R	One T104M	None/DPST	NA/240	16.4 lbs (7.4 kg)
T30401R	T104M & T101M	DPST/SPST	240/120	17.3 lbs (7.8 kg)
T30404R	Two T104M	DPST/DPST	240/240	17.3 lbs (7.8 kg)
T30604R	T106M & T104M	SPDT/DPST	240/240	17.3 lbs (7.8 kg)
T32404R*	T104M201 & T104M	DPST/DPST	240/240	17.3 lbs (7.8 kg)

* *The heater protection switch (fireman switch) is closed when the time switch contacts are open to allow remote operation of the heater. A flow or pressure switch must always be part of the heater control circuit.*

For additional trippers (1 ON 1 OFF per pack), order No. 156T1978A.
For additional OFF trippers (25 OFF per pack), order No. PA115.
For stand-offs for décor knockouts (4 stand-offs per pack), order No. 21T156A.
Note: See page 130 for a detailed list of replacement mechanisms.