http://waterheatertimer.org/Intermatic-P1103FE-24-hour-DPST-electronic-time-switch.html

INTERMATIC®
PB300E SERIES
TIME CONTROLS

INSTALLATION
OPERATION &
SERVICE MANUAL

24 Hr. Electronic Timer Replacement/Upgrade Kits

Model: PB313EK; Clock Supply Voltage: 120 V. 50-60 HZ

Model: PB314EK; Clock Supply Voltage: 240 V. 50-60 HZ

GENERAL INFORMATION

The PB300EK Series Electronic Timers are made to fit and replace most PB series Intermatic and certain other brand mechanical or electronic timers. The connected load however, must not exceed the rating of this timer. The timer is completely enclosed and a replaceable lithium battery will hold up memory for up to three years.
The kit contains all the necessary hardware for a speedy repair or exchange.

SPECIFICATIONS

Rating:
16A-Resistive, 8A FLA
Contact Configuration:
Single Pole, Double Pole
Power Consumption:
8V A
Battery Type:
CR2032 (1.5V Lithium)
Battery Life:
3 Years Minimum
No. of Programming Periods:
8 On/8 Off
Minimum Interval:
1 minute

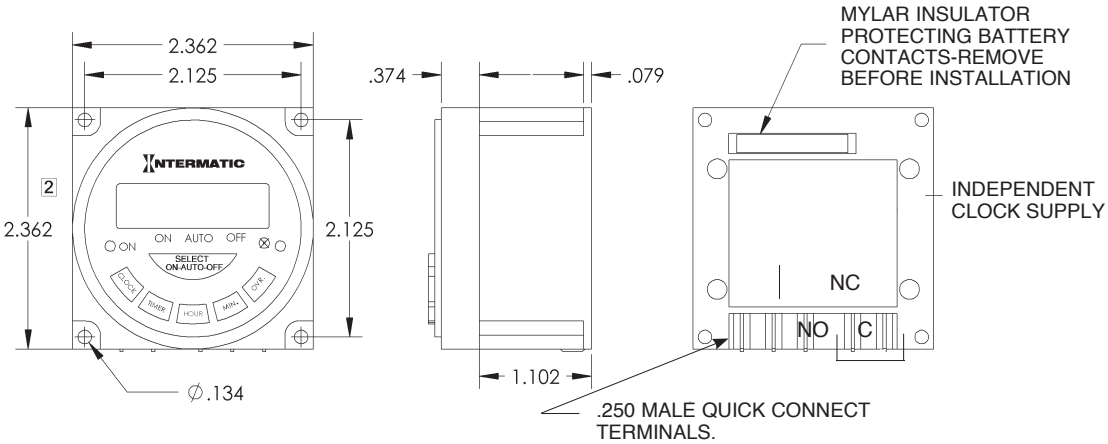

INSTALLATION

CAUTION:
- **Prior to installation, disconnect electricity at main panel**
- **Make sure the clock supply voltage of the timer slated for replacement is the same as this timer.**
- **Make sure the intended load is within the capacity of this timer-see specifications above.**

1. Both the old and the new timers have two sets of terminals: LOAD and CLOCK SUPPLY. Identify and mark the leads connected to these terminals.

2A. **Old Timer with four 1/4 inch tabs:** Remove female terminals from tabs and remove timer. Install new timer, using the screws and nuts supplied. Reconnect the two clock supply leads to CLOCK SUPPLY terminals and either one of the load leads to terminal C and the other load lead to N.O. (normally open) terminal.

2B. **Old Timer with two CLOCK SUPPLY LEADS and two 1/4 inch LOAD tabs:** Disconnect leads at twist on wire connectors and remove female terminals from tabs. Remove timer. Install new timer, using the screws and nuts supplied. Connect the stripped ends of either leads (supplied) to either wire-nutted junctions. Connect either one of the load leads to terminal C and the other load lead to N.O. (normally open) terminal.

2C. For other than Intermatic made timers, timers with 5 tabs and/or permanently attached leads, identify first each lead or tab then follow 2A or 2B above and corresponding markings on back of new timer.

SETTING / OPERATING INSTRUCTIONS

Programming Instructions

To Set or Change the Time of Day: To clear entire memory, press ⊗ key. Hold down the CLOCK key while pressing either the HOUR or MINUTE keys. Continue pressing until the desired number is shown. Then simply lift finger off the CLOCK key to set.

To Set Program (ON/OFF times): Press TIMER key once to enter into program mode. Display will show "1 ON-- --". Press the HOUR key and then the MINUTE key to select the desired first ON time. Press TIMER key once. Display will show "1 OFF -- --". Repeat previous step to select the desired first OFF time. Repeat the entire sequence to complete up to eight total ON/OFF times as desired. When programming is done, press the CLOCK key then the SELECT key repeatedly until the indicator bar is above the word "AUTO".

To Review Program: Press TIMER key repeatedly. When done, press CLOCK key to return to the time of day.

To Cancel/Change Part of the Program: Press TIMER key repeatedly until the particular ON or OFF time appears. Set new ON or OFF time. (See: To set Programs).

To Override the Automatic Operation one time: Press OVR. KEY.

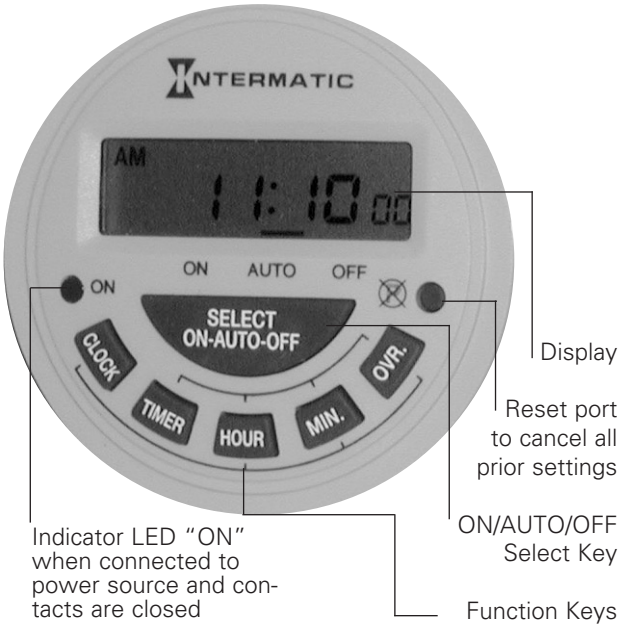

.

NOTE: Timer will resume automatic operation with the next opposite setpoint.

To Override Automatic Operation Permanently: Press SELECT key to move indicator bar to the desired ON or OFF position. **Note: Timer will not resume automatic operation until indicator bar is repositioned above the word AUTO.**

TROUBLESHOOTING

Symptom	Possible Cause(s)	Corrective Action
Blank Display	Discharged battery	Replace battery
	Defective timer	Replace timer
Timer will not respond to programming	Memory is full	Press ⊗ to clear memory
Timer will not function as programmed	Timer is in the wrong SELECT mode	Press SELECT key and move indicator bar over to AUTO
Timer is ON at all times	Timer is in ON mode	See above
	Defective timer	Replace timer

ONE YEAR LIMITED WARRANTY

If within the warranty period specified, this product fails due to a defect in material or workmanship, Intermatic Incorporated will repair or replace it, at its sole option, the unit free of charge. This warranty applies only to the original purchaser and is not transferable. This warranty does not apply to: (a) damage caused by accident, abuse, mishandling, dropping, acts of God, or any negligent use; (b) units which have been subject to unauthorized repair, opened, taken apart, or otherwise modified; (c) units not used in accordance with instructions; (d) damages exceeding the cost of the product. Some states do not allow a limitation of damages, so the foregoing limitation may not apply to you. This warranty gives you specific legal rights and you may have other rights that vary from state to state.

INTERMATIC INCORPORATED WILL NOT BE LIABLE FOR INCIDENTAL OR CONSEQUENTIAL DAMAGES. THIS WARRANTY IS IN LIEU OF ALL OTHER EXPRESS OR IMPLIED WARRANTIES. ALL IMPLIED WARRANTIES, INCLUDING THE WARRANTY OF MERCHANTABILITY AND THE WARRANTY OF FITNESS FOR A PARTICULAR PURPOSE, ARE HEREBY MODIFIED TO EXIST ONLY AS CONTAINED IN THIS LIMITED WARRANTY, AND SHALL BE OF THE SAME DURATION AS THE WARRANTY PERIOD STATED ABOVE.

This warranty service is available by either (a) returning the product to the dealer from whom the unit was purchased, or (b) mailing postage prepaid to the nearest authorized service center listed. Please be sure to wrap the product securely when mailing to avoid shipping damage. This warranty is made by: Intermatic Incorporated/After Sales Service, 7777 Winn Rd., Spring Grove, IL 60081-9698/815-675-7000 http://www/intermatic.com

Because of our commitment to continuing research and improvements, Intermatic Incorporated reserves the right to make changes, without notice, in the specifications and material contained herein and shall not be responsible for any damages, direct or consequential, caused by reliance on the material presented.

INTERMATIC INCORPORATED, SPRING GROVE, IL 60081-9698
http://www.intermatic.com

158PB12524