http://waterheatertimer.org/Tork-timers-and-manuals.html

TORK MODEL 7222
24 HR. TIME SWITCH
WITH SKIP-A-DAY

SWITCH: DPDT

CONTACT RATINGS:
40 AMP 120-277VAC
20 AMP INDUCTIVE
120-277VAC
SINGLE PHASE
40 AMP TUNGSTEN 120VAC
1000VA (120-277) PILOT DUTY
2HP 120VAC; 5HP 240VAC

TIMING MOTOR:
208-277VAC 60Hz

POWER CONSUMPTION:
3 WATTS MAX.

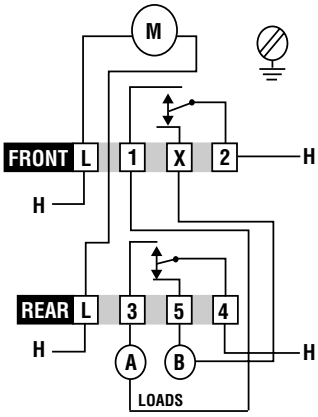

Typical for 208-240VAC supply

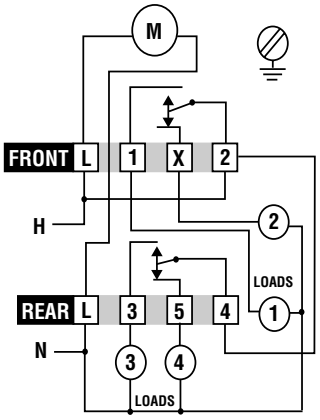

Typical for 277VAC supply

Disconnect power at main panel prior to installing or servicing this time switch or the equipment connected to it.
Connect in accordance with national and local electrical codes.
Supply Connections: Use gauge specified (AWG # 8-14) suitable for 75 degrees C (167 degrees F)

INSTALLATION AND OPERATING INSTRUCTIONS

TO SET ON AND OFF TIMES:
Light trippers turn ON. Dark trippers turn OFF. Place tripper on dial edge as shown in figure and set point of each tripper to desired operating time. CAUTION: Note if selected time is AM or PM. Hold tripper against dial edge and **firmly** tighten knurled screw.

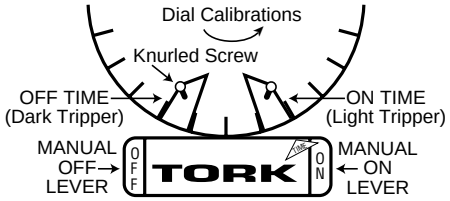

TO SET DIAL TO TIME: Turn dial counter-clockwise until correct time is indicated by arrow on name-plate.

FOR MANUAL OPERATIONS: Press down lever on right of nameplate to turn ON. Press down lever on left of nameplate to turn OFF.

TO OMIT ON OPERATION: 7 spoke wheel at lower left of 24 hour dial moves ahead once each day, about 5 hours before the first ON tripper is set to operate. Insert brass knurled screws in appropriate spokes on days when ON operations are to be omitted.

TO SET OMITTING WHEEL TO CORRECT DAY: Hold down OFF lever on left of nameplate. The red stud on this lever is the day-indicator. If the ON tripper has already passed the omitting wheel, turn omitting wheel clockwise until the present day of the week is indicated. If ON tripper has not passed omitting wheel, set omitting wheel so preceding day is indicated (24 hour dial turns counter-clockwise).

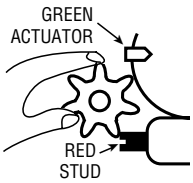

TO REMOVE MECHANISM FROM CASE: Press lever near case latch to release mainplate and swing the movement out. To replace, insert main-plate projections in slots opposite latch and swing movement in until it latches.

TORK®
1 GROVE STREET, MT. VERNON, NY 10550 TEL: 914-664-3542
FAX: 914-664-5052