http://waterheatertimer.org/Intermatic-timers-and-manuals.html#PB

Project:

Location:

Product Type:

Contact/Phone:

Model #:

FM1 Series

Panel Mount Timer Modules

The FM1 Series Electromechanical Timer Modules are designed to be placed inside a machine control panel, circuit board, or other equipment. They offer up to 21 Amp switching designed for control of heating, ventilation, air conditioning, refrigeration, lighting, security, circulating pumps, spas, OEM applications, or any electrical load requiring 24-Hour or 7-Day scheduling.

FM1STUZH-120U

Features

- 21 Amp SPDT Switch
- Captive Trippers with 15-minute intervals on 24-Hour models and 2-hour intervals on 7-Day models
- ¼" quick-connect terminals
- Noise Immune – ideal for robust applications
- Synchronous drive or quartz drive with battery backup
- True clock face, easy-to-set
- Available with or without override
- Compact size

Ratings

Size:	2.36" H x 2.36" W x 1.25" D
Supply Voltage:	24, 120, 240 VAC, 60 Hz models
Quartz:	24 VAC/DC, 120, 240 VAC 50/60 Hz
Power Consumption:	1 VA
Switch Type:	SPDT
Switch Rating:	21A Resistive @ 120-250 VAC 1 HP @ 120 VAC 2 HP @ 250 VAC 1350 W Tungsten @ 240 VAC
Wiring Connections:	¼" quick-connect terminals
Operating Temperature:	-40°F to 185°F (-40°C to 85°C) -4°F to 131°F (-20°C to 55°C) with battery backup
Installation:	Standalone or with Indoor/Outdoor enclosure
Battery Backup Option:	7 Days
Shipping Weight:	.15 lbs.

http://waterheatertimer.org/How-to-install-under-counter-water-heater.html

http://waterheatertimer.org/Intermatic-trippers-and-parts.html#FM1

http://waterheatertimer.org/Intermatic-timers-and-manuals.html#GM

HVACR

c UL us #10694

c SP us LR3730

FM1 Series

Model Number	Switch Program	Carryover	Program ON/OFF Every	Minimum ON/OFF Time	Switch Output	
					Type	Rating
FM1 STuZ (synchronous)†	24-Hour	No	15 Minutes	15 Minutes	SPDT	21A Resistive
FM1 SWuZ (synchronous)†	7-Day	No	2 Hours	2 Hours	SPDT	21A Resistive
FM1 QTuZ (quartz†)	24-Hour	7-Day	15 Minutes	15 Minutes	SPDT	21A Resistive
FM1 QWuZ (quartz)†	7-Day	7-Day	2 Hours	2 Hours	SPDT	21A Resistive

†For override switch: Add "H"
*Quartz models operate on 12-24 VAC/VDC, 120 and 240 VAC, and 50/60 Hz

Specification

Furnish and install a Grässlin FM1 _____ (24-Hour)(7-Day) timer module with_____ (15-Minute)(2-Hour) interval captive trippers and_____ (Quartz)(Synchronous) drive. Input voltage shall be_____ (24 VAC)(120 VAC) (240 VAC) and SPDT switch contacts shall be rated at:

- 21A Resistive
- 2 HP @ 250 VAC

To set the starting time and to provide time indication, the unit shall incorporate an authentic clock face. For override, the timer module shall contain a 3-way OFF/AUTO/ON switch. For carryover, the timer module shall have a quartz drive with 7-Day reserve carryover from a rechargeable battery. Installation for panel mounting.

Diagrams

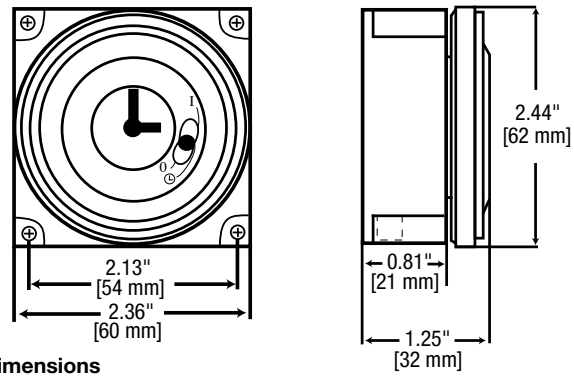

Product Dimensions

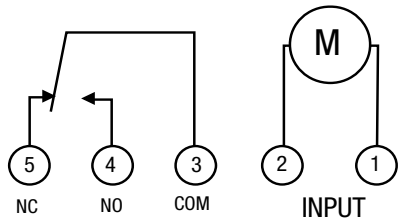

Terminal Connections

Override Mode

3-Way Manual
Override Switch
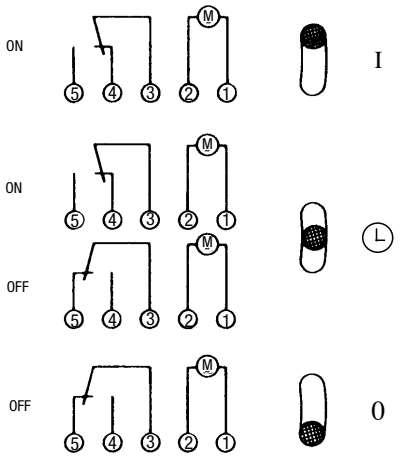
I = permanent ON
L = automatic
0 = permanent OFF