http://waterheatertimer.org/Digital-control-centers-and-manuals.html#P1353ME

http://waterheatertimer.org/How-to-wire-P1353-and-PE153.html

Section 4:

Programming the Three-Circuit Clock Mechanism

Overview of Three Circuit Clock Control Panel

The Intermatic Three-Circuit Clock Control Panel is easy to program and capable of automatically switching loads on three circuits according to a preset 24-hour daily schedule, and providing control over a variety of different applications. **Figure 4-1 shows the front of the mechanism.**

MODE BUTTON—With a small tool, press and hold this button down for 5 seconds. Using the Up and Down arrow keys, you can select the appropriate preprogrammed mode that matches your particular pool or spa equipment pad configuration. Hit the ENTER key when finished.

PROGRAM BUTTON—used to enter programming mode and access different programming features.

ENTER BUTTON—used to save programming changes to memory and exit programming mode.

ARROW BUTTONS—used to increase or decrease programming parameters when in programming mode.

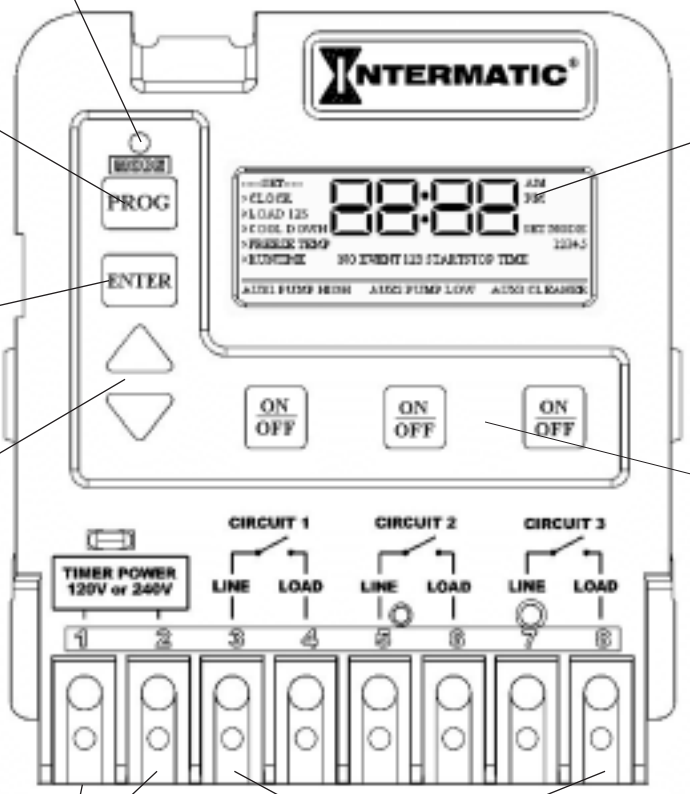

DISPLAY—Indicates time of day and programming settings during programming mode.

ON/OFF BUTTONS—Turn on and off circuit functions.

Figure 4-1

TIMER POWER—the two terminals where you wire 120V or 240V to power the multipurpose control. Be sure the jumper on the back, matches the source voltage. See page 26.

CIRCUITS 1, 2, & 3—These six terminals are where you wire the equipment source voltage and equipment load lines. You can have different source voltages for each circuit, depending on your equipment requirements.

NOTE: The three-circuit clock breaks only <u>one leg</u> to the load. Wire the other leg directly from the line to the load. (Refer to the illustration on the clock, above the terminals.)

Identifying Connections and Selecting Proper Input Voltage

Figure 4-2 below shows the reverse side of the Three-Circuit Clock Control Panel. Detailed connection information is provided below the diagram.

CAUTION: If the Source Voltage Selector Jumper is in the wrong position, the F1 fuse will blow and you may damage the circuit board, voiding the warranty.

1. **Before making any connections: Set the Source Voltage Selector Jumper.** The factory default position for this jumper is the 240 Volt position.
2. If the input voltage for the clock is 120 Volts, change this jumper to the 120 Volt position.

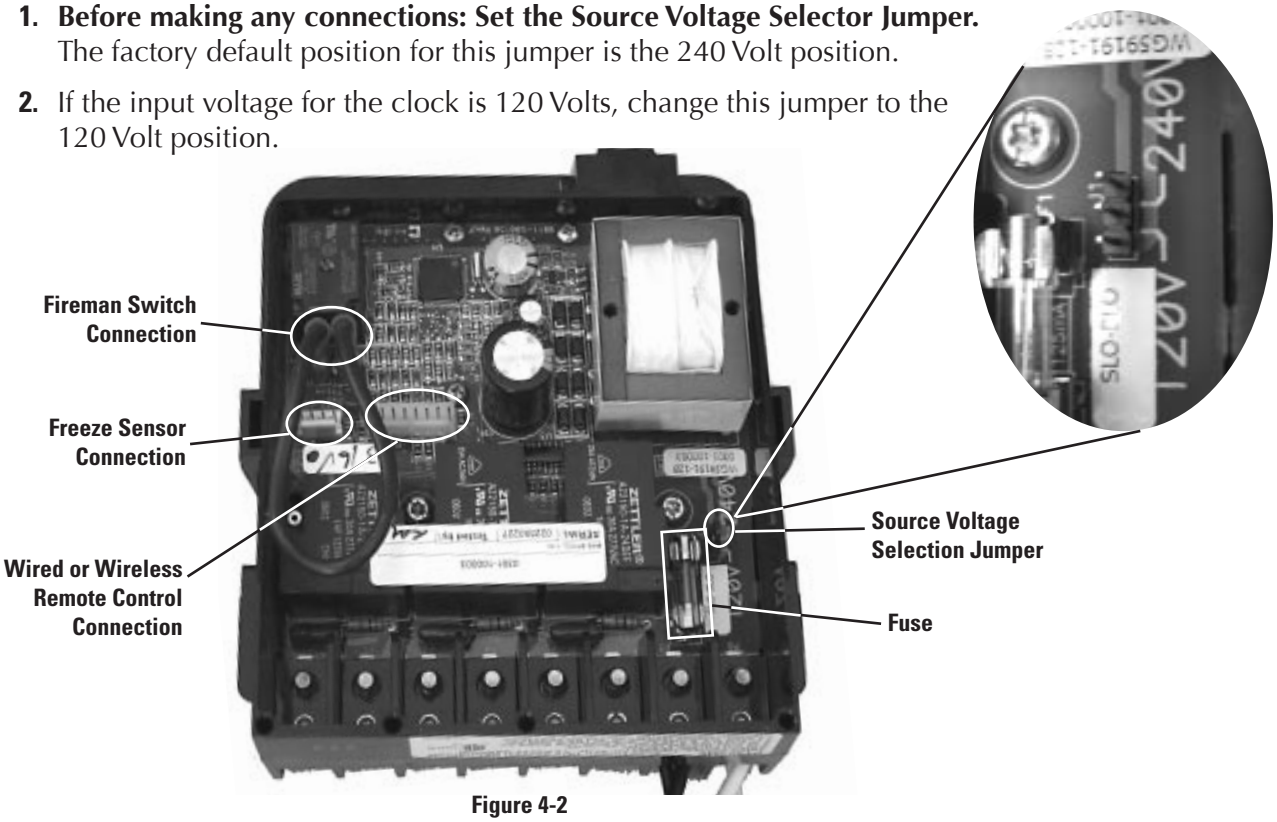

Figure 4-2

Connection Detail

- **Freeze Sensor Connection** — For the Intermatic Freeze Sensor *(178PA28A)*, which is necessary for the freeze protection circuit and programming to work. Disconnect power when connecting the freeze sensor. Only an Intermatic sensor can be used. Refer to page 35 for programming information.
- **Firemen Switch Connection** — For the firemen switch wires that connect to the Pool/Spa heater. If installing with a Wireless Remote Control, use the two brown wires coming from the panel-mounted receiver to create the circuit between this switch and the heater. Connectors should be ¼" female spade connectors crimped to insulated-type wire. This connection is a simple SPST contact, and switches the supplied heater voltage. It does not supply voltage to the heater thermostat. In non-wireless installations, clip the "loop" supplied, then connect with wire nut connectors. Refer to page 34 for programming information.
- **Remote Control Connection** — Connects the Intermatic Remote Control *(133PE1484A)*, which allows you to remotely turn ON or OFF all three available circuits. It also has status lights that indicate when a load is ON, OFF or delayed. If using the Three-Button Wired Remote Control *(133PE1484A)*, it connects here as well. Refer to page 38 for additional information.

Circuit Ratings

CLOCK SOURCE VOLTAGE — 120/240VAC, 50/60 Hz

POWER CONSUMPTION — 6.0 Watts Max

CIRCUIT CONTACT CONFIGURATION — SPST

CIRCUIT SWITCH RATINGS ALL MODES:

- 20A Resistive, 120/240 VAC, 50/60 Hz
- 20A FLA@120 VAC, 96A LRA@120 VAC, 50/60 Hz
- 17A FLA@240 VAC, 80A LRA@240 VAC, 50/60 Hz
- 5 Amps Tungsten, 120/240 VAC, 50/60 Hz
- 5 Amps Ballast, 120/240 VAC, 50/60 Hz

EVENTS PER CIRCUIT — 3 On/Off Events Per Circuit

INTERNAL BATTERY POWER:

- 40-year retention for all programmed settings
- Up to 24 hours

Mode Selection/Definition

IMPORTANT NOTE—There are six modes to choose from, depending on your pool or spa equipment pad configuration. Each mode has specific programming, timing, and lockout features that are designed to work with specific types of pool or spa equipment. Mode setting is generally done only once and usually during the initial installation. It is purposely difficult to enter the mode-changing program and should only be done by a Qualified Installer. Be sure you fully understand each mode definitions and installation, prior to selecting the proper mode.

Mode 1 — (Aux1, Aux2, Aux3)

Each of the three single pole circuits are defined generically, and can control any load within each of its individual circuit ratings. All three circuits act independent of each other.

NOTE: This drawing illustrates that only one leg is broken, with the other leg going directly to load, whether 120V or 240V.

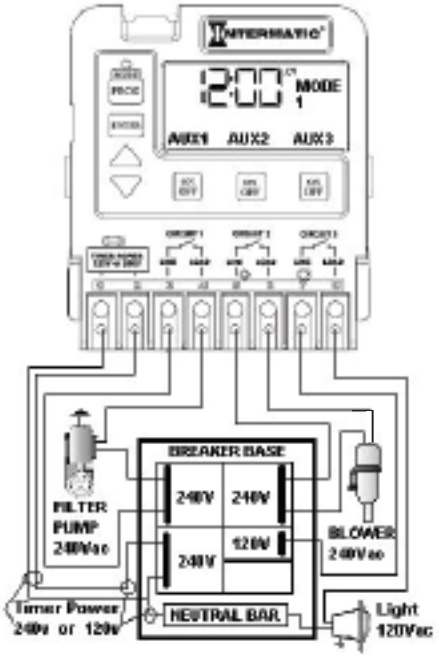

Figure 4-3

Mode 2 — (Pump High, Pump Low, Aux3)

Circuit one and two are dedicated single pole outputs for a two-speed pump load. Circuits one and two will never be ON at the same time, consistent with a two-speed pump application. Circuit three is single pole circuit for a generic load, and independent of circuits one and two.

NOTE: This drawing illustrates that <u>only one</u> leg is broken, with the other leg going directly to load, whether 120V or 240V.

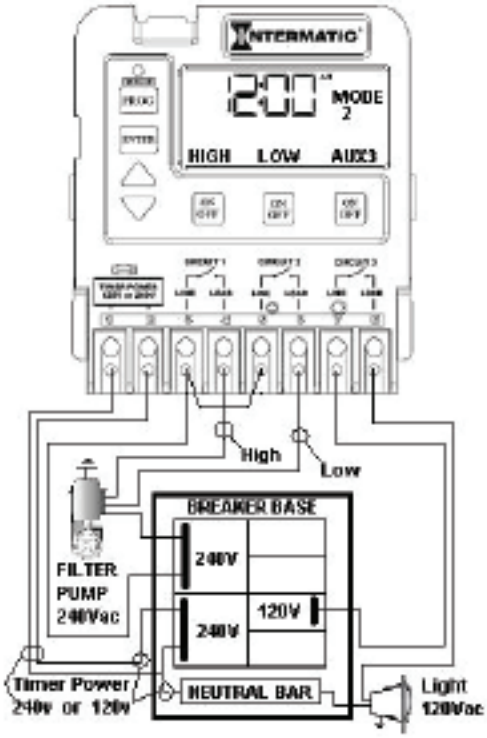

Figure 4-4

Mode 3 — (Pump, Aux2, Cleaner Pump)

Circuit one and three are dedicated single pole outputs for a single speed pump working with a pressure side cleaner pump. Circuit three will never come on unless circuit one is on for at least one minute, consistent with a pressure side cleaner pump. Circuit two is a single pole circuit for a generic load, independent of circuits one and three.

NOTE: This drawing illustrates that <u>only one</u> leg is broken, with the other leg going directly to load, whether 120V or 240V.

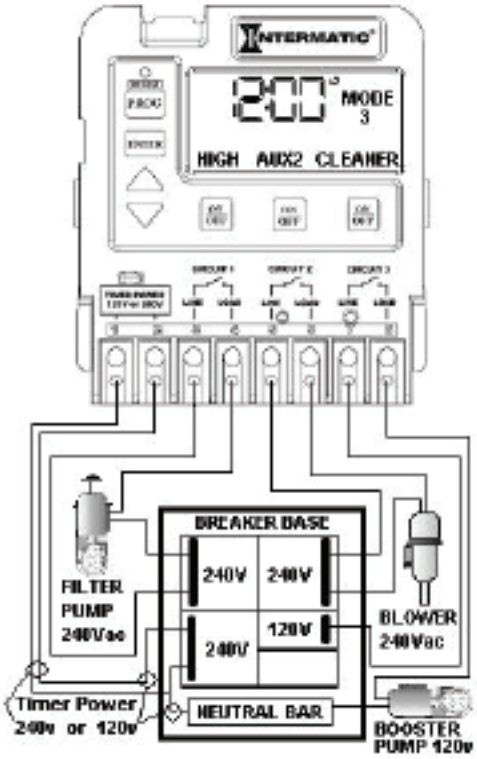

Figure 4-5

Mode 4 — (Pump High, Pump Low, Cleaner Pump)

Circuit one and two are dedicated single pole outputs for a two-speed pump load. Circuits one and two will never be ON at the same time, consistent with a two-speed pump application. Circuit three is also a dedicated single pole output for a pressure side cleaner pump. Circuit three will never come on unless circuit one is on for at least one minute, consistent with a pressure side cleaner pump.

NOTE: This drawing illustrates that <u>only one</u> leg is broken, with the other leg going directly to load, whether 120V or 240V.

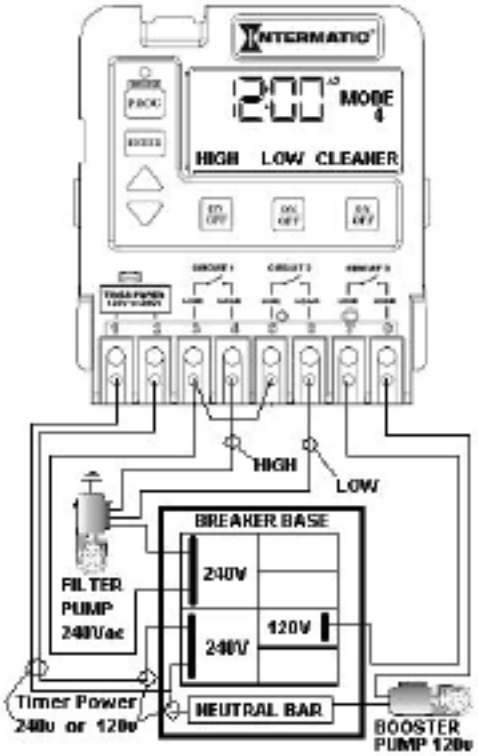

Figure 4-6

Mode 5 — (Pump, Pump, Aux3)

Circuit one and two are now coupled together making up one circuit capable of switching the power source to one pump. The On/Off button for circuit one now controls both circuit one and two simultaneously. The On/Off button for circuit two is disabled. Circuit three remains a single pole circuit for a generic load, and is independent of circuits one and two.

NOTE: This drawing illustrates that <u>only one</u> leg is broken, with the other leg going directly to load, whether 120V or 240V.

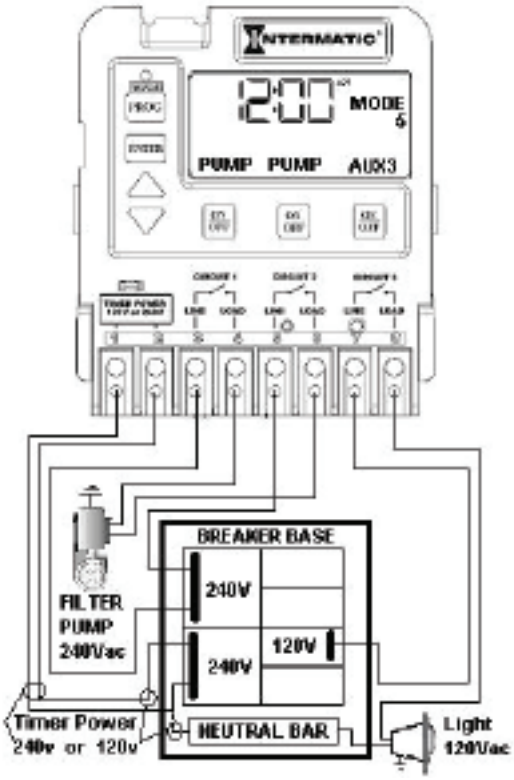

Figure 4-7

Mode 6 — (Aux1, Aux2, Aux3)

Identical to Mode 1, in which each of the three single pole circuits are defined generically and can control any load within each of its individual circuit ratings, with all three circuits act independent of each other.

However, with Mode 6, the fireman switch closes only when Circuit 1 (the filter pump) is manually turned on — not when the clock turns it on. This mode is useful when you have Circuit 1 connected to a circulation pump in the spa. When the spa is not in use, the clock circulates the water to filter it, but does not turn on the heater. When the spa is in use, the heat is also turned on by manually switching Circuit 1.

NOTE: This drawing illustrates that <u>only one</u> leg is broken, with the other leg going directly to load, whether 120V or 240V.

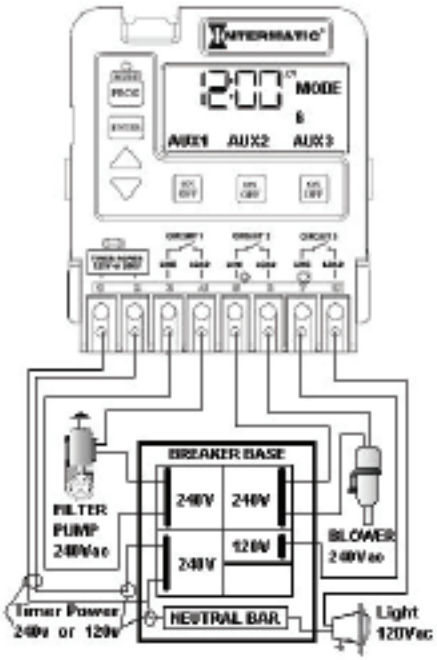

Figure 4-8

Setting Mode

Overview

Determine the mode that would be best for your installation, then select it using the instructions provided below.

Procedure

NOTE: If you don't press a button within 60 seconds while setting **Mode**, the control will save current settings and return to normal operating mode.

1. With a small pointed tool (i.e., pen, pencil, screwdriver, etc.), press and hold the **<MODE> button** for about 5 seconds until the display shows **SET MODE** and the **Mode Number** blinks.
2. Use the **<Arrow> buttons** to cycle through all five available modes. Each **circuit output will be defined** on the display as you cycle through the available modes.
3. Once the desired mode number is displayed, press and release the **<ENTER> button**. This saves the mode number to memory and exits SET MODE programming.

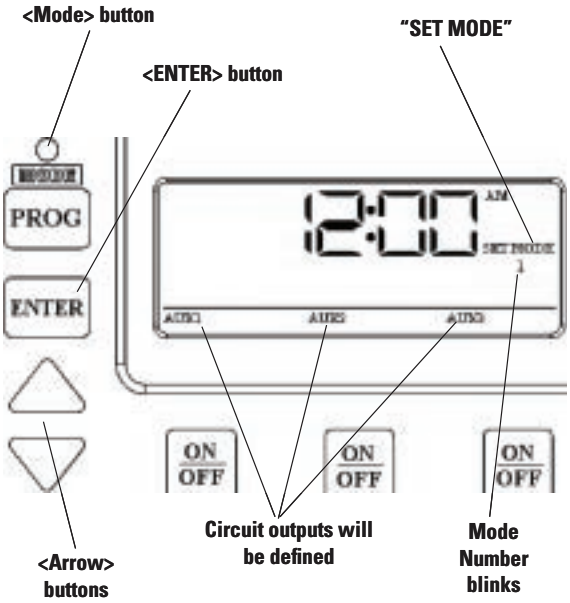

Setting Time of Day

Overview

This procedure makes sure that timer-controlled actions will occur at the right time.

Procedure

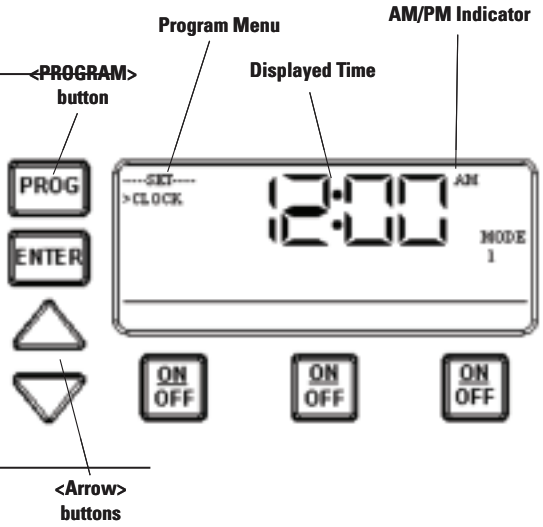

NOTE: If you don't press a button within 60 seconds while setting **Time of Day**, the control will save current settings and return to normal operating mode.

1. Press and release the **<PROGRAM> button**. The **displayed time** will start to blink, and the **program menu** will display Set Clock.
2. Use the **<Arrow> buttons** to change the time.

   NOTE: Check the AM and PM indicator to make sure your setting is correct.
3. When the time is set, you have two choices:
   - Press and release the **<ENTER>** button to save and exit programming.
   - Press and release the **<PROGRAM>** button to save and go on to the next programming feature.

Setting the On/Off Times for Each Circuit

Overview

You can set up to *three* separate ON/OFF times per load or circuit, and you can set specific times for them to turn on and off, i.e., you want the filter pump to run from noon till 4:00 P.M., or you want lights on from 7:00 P.M., off at 11:00 P.M., then on again at 6:00 A.M. and off at 8:00 A.M.

Procedure

PROGRAMMING TIP: You can use the **<ENTER>** button to review all the events for each circuit. You can use the **<PROGRAM>** button to advance through each circuit and on to the next programming feature.

1. If you pressed and released the program key from the previous procedure, the screen display should look like the illustration at the right. [If not, press and release the <PROGRAM> button ***twice***.]

   Note that the display indicates that the first event of circuit one has not been defined **(NO EVENT1)**.

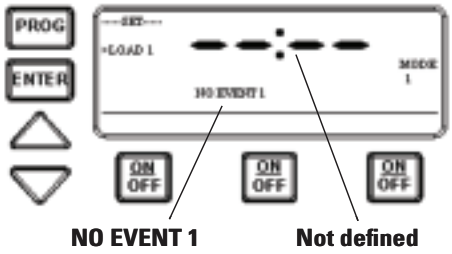

2. Use the <Arrow> buttons to define the **Start** time for the **first event (EVENT1)** for circuit one. The screen displays:

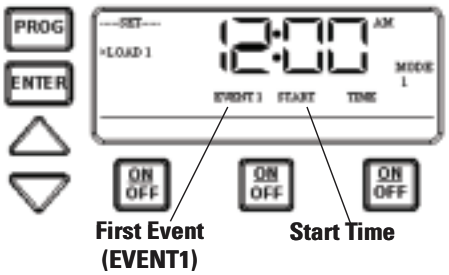

3. Once you are satisfied with the start time, press and release the <ENTER> button, saving the start time. The display will prompt for the **Stop time** for the **first event (EVENT1)** for circuit one. The screen displays:

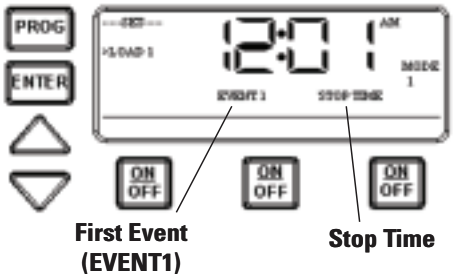

4. Use the <Arrow> buttons to define the **Stop** time for the first event (EVENT1) for circuit one. Press and release the <ENTER> button when complete. The program will now advance to the second event (EVENT2) for circuit one, as shown below. Note that the display indicates that the second event of circuit one **has not been defined (NO EVENT2)**.

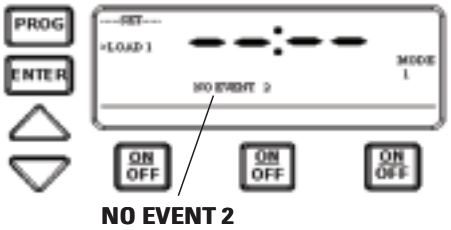

5. Repeat Steps 2 thru 4 to set a second event for circuit #1, and for subsequent events you wish to set up.

Notes on Setting ON/OFF Times for Each Mode

General Note

- The ON/OFF buttons were provided for service operations, and for circumstances where instantaneous response is required. If the intent is to turn equipment on and off everyday at the same time, programming individual events will make sure these functions take place.
- All circuits will respond to a programmed off time. Therefore, when a circuit is turned on with the ON/OFF button, it automatically turns itself off at the end of the next programmed event.
- If there are no events programmed, the circuit stays on until the ON/OFF button is pressed again.
- If the ON/OFF button is pressed while the corresponding circuit is on, it turns the circuit off and supersedes any program in progress. The priority is always given to the last manual operation.

Notes on Setting ON/OFF Times for Each Mode *(cont'd)*

Mode 1 — (Aux1, Aux2, Aux3)

All three of the available circuits act independently, and up to three individual on/off times can be set for each circuit independently.

Mode 2 — (Pump High, Pump Low, Aux 3)

In this mode circuits 1 & 2 are connect to a two speed pump, and Aux 3 is connected independent of circuits 1 & 2. In the event that you program high and low speed to be on at the same time or if their independent ON times overlap, high speed will always take precedence.

> **Example:** *Low speed is programmed to come ON at noon and run until 6 PM. High speed is programmed to come on at 2 PM and turn off at 4 PM. In this case the pump will come ON at noon in low speed, go to high speed at 2 PM, and back to low speed at 4 PM, and shut off at 6 PM.*

All manual ON operations for circuits 1 & 2 override all programmed ON times. Therefore, any desired low and high-speed run combinations need to be programmed as separate events and cannot controlled by combining the manual ON/OFF button with a scheduled event. The last speed started manually has priority over all prior automatic and manual operations.

> **Example:** *You would like to run the pump in high speed for 6 hours and low speed for the remainder of the time. Program a 6-hour event for high speed, and an 18-hour event for low speed. Do not turn the low speed on manually, and program a 6-hour event for high speed. The high speed will not occur.*

Mode 3 — (Filter Pump, Aux2, Cleaner Pump)

The cleaner pump cannot turn on unless the filter pump has been on for at least 30 seconds. Therefore, for any ON/OFF time programmed for the cleaner pump, the filter pump will come on first, followed 30 seconds later by the cleaner pump. Both the cleaner and filter pump will turn off according to the programmed off time. When programming an event for the cleaner pump, it is not necessary to program a separate event for the filter pump, as it will automatically turn on when the cleaner pump turns on at its next scheduled on time.

Mode 4 – (Pump High, Pump Low, Cleaner Pump)

Mode 4 is a combination of Modes 2 and 3, so refer above to Modes 2 and 3 for programming specifics. Note that if the cleaner pump is programmed to come ON, the control will turn ON the filter pump to high speed 30 seconds prior to turning the cleaner pump ON, even if the filter pump is currently on in low speed.

Mode 5 – (Aux1, Aux3)

Both of the available circuits act independently, similar to Mode 1. Therefore you can set up to three individual ON/OFF times for each circuit and they will act independently.

Mode 6 — (Aux1, Aux2, Aux3)

All three of the available circuits act independently, and up to three individual on/off times can be set for each circuit independently. When the clock turns ON Circuit #1 due to a scheduled ON time, the heater will not come on. The heater will come ON only when Circuit #1 is turned ON manually.

Setting the Heater's Cool Down Time (optional)

Overview

The heater's cool down time is a time defined by the programmer. This time is defined as the additional time the pump will run, over and beyond the desired pump OFF time, to make sure the heater is cooled down before shutting off.

If the heater were to stay on after the pump had shut off, the water in the pipe could boil, damaging the system. Refer to heater manufacturer for specific time.

If a cool down time is programmed, the cool down cycle will occur in all cases, even if the user turns off the pump. To override the cool down time, press and release the **ON/OFF** key a second time during the cool down cycle. The cool down feature only applies to Circuit #1, in all modes.

Procedure

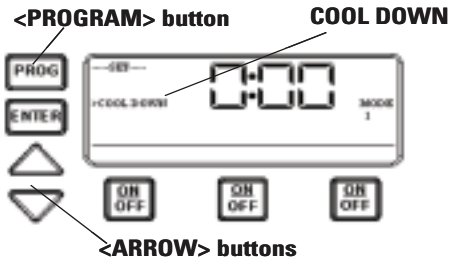

1. Use the **<PROGRAM>** button to advance to the **COOL DOWN** setting, as shown. The default cool down time is zero.
2. Use the **<ARROW>** buttons to modify the cool down time. The programming range is from zero to fifteen minutes and no seconds.
3. When you've set the cool down time, press the <ENTER> button to save and exit, or the **<PROGRAM>** button to save and advance to the next programming feature.

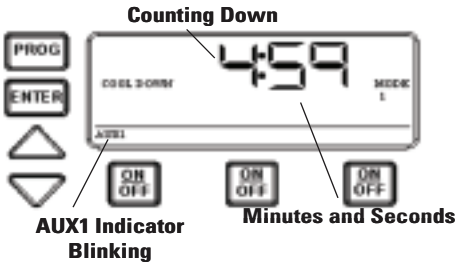

The display will look like the example shown at the right when the Heater's Cool Down Time feature is activated. In this example, the cool down time was set for 5 minutes, and is in the process of **counting down** to zero, showing **minutes and seconds**.

The **AUX1** indicator is blinking, indicating that the Cool Down feature is activated for Circuit #1. The Cool Down feature only affects Circuit #1. When the countdown display reaches zero, Circuit #1 will open and the time display will change back to the time of day.

NOTE: You can override the Cool Down feature during countdown by pressing and releasing the ON/OFF button associated with Circuit #1. This will end the cool down cycle and immediately power off Circuit #1.

Setting Freeze Temperature (optional)

Overview

Freeze temperature programming will not appear unless the optional Intermatic Freeze Sensor (*178PA28A*) has been installed. This is the only freeze sensor that will work with the P1353ME Mechanism.

Power must be disconnected when connecting the 178PA28A sensor.

If Intermatic Freeze Sensor (*178PA28A*) has been installed, use the following procedure to program freeze temperature.

Procedure

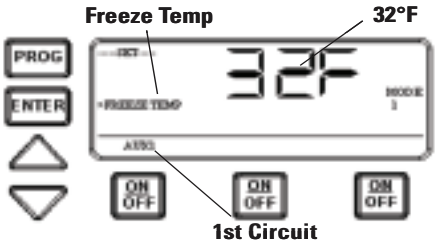

1. Use the <PROGRAM> button to advance to the **Freeze Temp** setting, as shown. The **1st Circuit** and **32°F** are the factory default settings.
2. Use the <ARROW> buttons to modify the desired freeze temperature trip point. The programming range is 32° through 44°F.
3. After you have set the desired trip temperature, push and release the desired ON/OFF button to indicate which circuits should come ON when the trip temperature is reached.
4. When programming is complete, , press the <ENTER> button to save and exit, or the <PROGRAM> button to save and advance to the next programming feature.

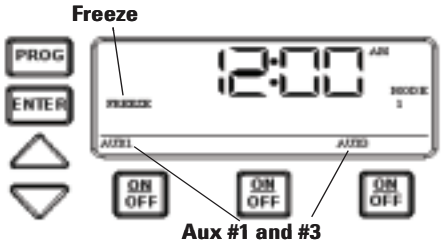

The display will look like the example shown at the right when the Freeze Control feature is activated. In this example, the freeze sensor was connected, enabling the Freeze Control feature. Circuits #1 and #3 were programmed to come on during a **Freeze** condition.

AUX1 and **AUX3** will blink, indicating that the control has activated these two circuits due to a freeze condition.

NOTE: You can override the circuits during a freeze condition by pressing and releasing the corresponding ON/OFF buttons. This will turn the devices OFF. The override will only last one hour, so if the freeze condition still exists after one hour, Circuits #1 and #3 will come back on.

NOTE: Freeze protection stays enabled until the outside air temperature exceeds the programmed freeze temperature for more than one minute.